User Guides

IDC DOCUMENTATION

Configuration of PIDC Databases

Approved for public release;
distribution unlimited

Revision 0.1

Notice

This document was published by the Monitoring Systems Operation of Science Applications International Corporation (SAIC) as part of the International Data Centre (IDC) Documentation. It was first published in March 1999 and was republished electronically as Revision 0.1 in April 2001 to include minor changes (see the following Change Page). IDC documents that have been changed substantially are indicated by a whole revision number (for example, Revision 1).

Contributors

Jane Bohlin, Pacific Sierra Research
Roger Bowman, Science Applications International Corporation
David Brown, Pacific Sierra Research
Jerry Carter, Science Applications International Corporation
Benjamin Kohl, Science Applications International Corporation
Michael Skov, Science Applications International Corporation

Trademarks

Enterprise is a registered trademark of Sun Microsystems.
Ethernet is a registered trademark of Xerox Corporation.
Java is a registered trademark of Sun Microsystems.
Oracle is a registered trademark of Oracle Corporation.
PL/SQL is a trademark of Oracle Corporation.
Programmer/2000 is a trademark of Oracle Corporation.
Solaris is a registered trademark of Sun Microsystems.
SPARC is a registered trademark of Sun Microsystems.
SQL*Plus is a registered trademark of Oracle Corporation.
Sun is a registered trademark of Sun Microsystems.
UltraSPARC is a registered trademark of Sun Microsystems.
UNIX is a registered trademark of UNIX System Labs, Inc.

Ordering Information

The ordering number for this document is SAIC-01/3022.

This document is cited within other IDC documents as [IDC5.1.3Rev0.1].

Change Page

This document is Revision 0.1 of the Configuration of PIDC Databases. The following changes have been made for this publication:

Date	Page	Change
26 March 2001	as needed	Added change bars (vertical lines that appear in the margin) to identify new or revised material.
	Notice	Changed Notice Page to include an explanation of the Revision number, a reference to the Change Page, and a new SAIC number.
	Change Page	Added this Change Page.
	13	Changed Frequency for *AuxArchiver* from bi-weekly to daily.
	14	Changed "The one definitive **lastid**" to "The primary **lastid**".
	14	Added a new paragraph describing **lastid_arcdb**.
	21	Added a bullet describing the use of **lastid_arcdb**.
	29	Added **lastid_arcdb** and a description to the schema administration function of the IDCX account.
	31	Added **lastid_arcdb** to the IDCX Account Table Privileges table.
	33	Removed **wfdisc** archival privileges from the IDCX Account Table Privileges table.
	33	Added a footnote to the IDCX Account Table Privileges table.
	35	Added **lastid_arcdb** to the IDCX Account Table Growth table.
	37	Added a footnote to the IDCX Account Table Growth table.
	39	Added **lastid_arcdb** to the IDCX Account Indexes table.
	41	Added a footnote to the IDCX Account Indexes table.
	111	Changed the RMSAUTO Triggers table pages to landscape.
	114	Changed "**gards_efficiency_pairs_**" to "**gards_efficiency_pairs**" in the "Tables for Update" column of the RMSAUTO Triggers table.
	111–116	Changed "**rmman**" to "RMSMAN" in the "Tables for Update" column of the RMSAUTO Triggers table.

Configuration of PIDC Databases

CONTENTS

About this Document i

- PURPOSE ii
- SCOPE iv
- AUDIENCE iv
- RELATED INFORMATION iv
- USING THIS DOCUMENT iv

Conventions vi

Chapter 1: Overview 1

- PIDC DATABASE INSTANCES 2
- HARDWARE AND SOFTWARE REQUIREMENTS 3
- SCHEMA 4
- S/H/I DATA FLOW 5

Chapter 2: Database Interaction and Policies 11

- DATABASE LINKS 12
- DATA MIGRATION 12
- UNIQUE IDENTIFIER GENERATION POLICY 14
- TABLE CREATION POLICY 14
- INDEX CREATION POLICY 16
- DATABASE MONITORING POLICY 17

Chapter 3: Account Descriptions 19

- INTRODUCTION 20
- IDCX ACCOUNT 27
- LEB ACCOUNT 44

- MAP ACCOUNT 54
- MIGRATE ACCOUNT 57
- REB ACCOUNT 60
- SEGMENT ACCOUNT 68
- SEL1 ACCOUNT 72
- SEL2 ACCOUNT 79
- SEL3 ACCOUNT 86
- STATIC ACCOUNT 92
- VIEW ACCOUNTS 97
- RMSAUTO ACCOUNT 104
- RMSMAN ACCOUNT 117
- CENTER ACCOUNT 124

References 127

Glossary G1

Index I1

Configuration of PIDC Databases

FIGURES

FIGURE 1.	DATA IMPORT AND STATION PROCESSING MODEL	5
FIGURE 2.	NETWORK PROCESSING MODEL	6
FIGURE 3.	INTERACTIVE ANALYSIS MODEL	7
FIGURE 4.	VIEWING AND INTERACTIVE ANALYST TRAINING MODEL	8
FIGURE 5.	POST-ANALYSIS PROCESSING MODEL	9
FIGURE 6.	DATA MIGRATION AND EXPORT MODEL	10

Configuration of PIDC Databases

TABLES

TABLE I:	DATA FLOW SYMBOLS	vi
TABLE II:	TYPOGRAPHICAL CONVENTIONS	vii
TABLE III:	TERMINOLOGY	vii
TABLE 1:	DATABASE SERVER HARDWARE	3
TABLE 2:	ORACLE PRODUCTS FOR RDBMS INSTANCE	4
TABLE 3:	MIGRATION FROM OPERATIONAL TO ARCHIVAL DATABASE	13
TABLE 4:	SUMMARY OF DATABASE ACCOUNTS	21
TABLE 5:	FUNCTIONAL GROUPS	23
TABLE 6:	TABLE PRIVILEGES	23
TABLE 7:	TABLE GROWTH	24
TABLE 8:	INDEXES	25
TABLE 9:	SYNONYMS	26
TABLE 10:	VIEWS	26
TABLE 11:	TRIGGERS	27
TABLE 12:	SEQUENCES	27
TABLE 13:	IDCX ACCOUNT BY FUNCTION	28
TABLE 14:	IDCX ACCOUNT TABLE PRIVILEGES	30
TABLE 15:	IDCX ACCOUNT TABLE GROWTH	33
TABLE 16:	IDCX ACCOUNT INDEXES	37
TABLE 17:	IDCX ACCOUNT SYNONYMS	42
TABLE 18:	IDCX ACCOUNT VIEWS	43
TABLE 19:	IDCX ACCOUNT TRIGGERS	43
TABLE 20:	IDCX ACCOUNT SEQUENCES	44
TABLE 21:	LEB ACCOUNT BY FUNCTION	45
TABLE 22:	LEB ACCOUNT TABLE PRIVILEGES	46

TABLE 23:	LEB ACCOUNT TABLE GROWTH	47
TABLE 24:	LEB ACCOUNT INDEXES	49
TABLE 25:	LEB ACCOUNT SYNONYMS	52
TABLE 26:	LEB ACCOUNT VIEWS	53
TABLE 27:	LEB ACCOUNT TRIGGERS	54
TABLE 28:	LEB ACCOUNT SEQUENCES	54
TABLE 29:	MAP ACCOUNT BY FUNCTION	54
TABLE 30:	MAP ACCOUNT TABLE PRIVILEGES	55
TABLE 31:	MAP ACCOUNT TABLE GROWTH	55
TABLE 32:	MAP ACCOUNT INDEXES	56
TABLE 33:	MAP ACCOUNT SYNONYMS	56
TABLE 34:	MAP ACCOUNT VIEWS	56
TABLE 35:	MAP ACCOUNT TRIGGERS	56
TABLE 36:	MAP ACCOUNT SEQUENCES	56
TABLE 37:	MIGRATE ACCOUNT BY FUNCTION	57
TABLE 38:	MIGRATE ACCOUNT TABLE PRIVILEGES	57
TABLE 39:	MIGRATE ACCOUNT TABLE GROWTH	58
TABLE 40:	MIGRATE ACCOUNT INDEXES	58
TABLE 41:	MIGRATE ACCOUNT SYNONYMS	58
TABLE 42:	MIGRATE ACCOUNT VIEWS	59
TABLE 43:	MIGRATE ACCOUNT TRIGGERS	59
TABLE 44:	MIGRATE ACCOUNT SEQUENCES	59
TABLE 45:	REB ACCOUNT BY FUNCTION	60
TABLE 46:	REB ACCOUNT TABLE PRIVILEGES	61
TABLE 47:	REB ACCOUNT TABLE GROWTH	62
TABLE 48:	REB ACCOUNT INDEXES	64
TABLE 49:	REB ACCOUNT SYNONYMS	67
TABLE 50:	REB ACCOUNT VIEWS	68
TABLE 51:	REB ACCOUNT TRIGGERS	68
TABLE 52:	REB ACCOUNT SEQUENCES	68

TABLE 53:	SEGMENT ACCOUNT BY FUNCTION	68
TABLE 54:	SEGMENT ACCOUNT TABLE PRIVILEGES	69
TABLE 55:	SEGMENT ACCOUNT TABLE GROWTH	69
TABLE 56:	SEGMENT ACCOUNT INDEXES	70
TABLE 57:	SEGMENT ACCOUNT SYNONYMS	71
TABLE 58:	SEGMENT ACCOUNT VIEWS	71
TABLE 59:	SEGMENT ACCOUNT TRIGGERS	72
TABLE 60:	SEGMENT ACCOUNT SEQUENCES	72
TABLE 61:	SEL1 ACCOUNT BY FUNCTION	73
TABLE 62:	SEL1 ACCOUNT TABLE PRIVILEGES	73
TABLE 63:	SEL1 ACCOUNT TABLE GROWTH	74
TABLE 64:	SEL1 ACCOUNT INDEXES	75
TABLE 65:	SEL1 ACCOUNT SYNONYMS	77
TABLE 66:	SEL1 ACCOUNT VIEWS	79
TABLE 67:	SEL1 ACCOUNT TRIGGERS	79
TABLE 68:	SEL1 ACCOUNT SEQUENCES	79
TABLE 69:	SEL2 ACCOUNT BY FUNCTION	80
TABLE 70:	SEL2 ACCOUNT TABLE PRIVILEGES	80
TABLE 71:	SEL2 ACCOUNT TABLE GROWTH	81
TABLE 72:	SEL2 ACCOUNT INDEXES	82
TABLE 73:	SEL2 ACCOUNT SYNONYMS	84
TABLE 74:	SEL2 ACCOUNT VIEWS	85
TABLE 75:	SEL2 ACCOUNT TRIGGERS	85
TABLE 76:	SEL2 ACCOUNT SEQUENCES	85
TABLE 77:	SEL3 ACCOUNT BY FUNCTION	86
TABLE 78:	SEL3 ACCOUNT TABLE PRIVILEGES	86
TABLE 79:	SEL3 ACCOUNT TABLE GROWTH	87
TABLE 80:	SEL3 ACCOUNT INDEXES	88
TABLE 81:	SEL3 ACCOUNT SYNONYMS	90
TABLE 82:	SEL3 ACCOUNT VIEWS	92

TABLE 83:	SEL3 ACCOUNT TRIGGERS	92
TABLE 84:	SEL3 ACCOUNT SEQUENCES	92
TABLE 85:	STATIC ACCOUNT BY FUNCTION	93
TABLE 86:	STATIC ACCOUNT TABLE PRIVILEGES	93
TABLE 87:	STATIC ACCOUNT TABLE GROWTH	94
TABLE 88:	STATIC ACCOUNT INDEXES	95
TABLE 89:	STATIC ACCOUNT SYNONYMS	96
TABLE 90:	STATIC ACCOUNT VIEWS	97
TABLE 91:	STATIC ACCOUNT TRIGGERS	97
TABLE 92:	STATIC ACCOUNT SEQUENCES	97
TABLE 93:	VIEW ACCOUNTS BY FUNCTION	98
TABLE 94:	VIEW ACCOUNTS TABLE PRIVILEGES	98
TABLE 95:	VIEW ACCOUNTS TABLE GROWTH	99
TABLE 96:	VIEW ACCOUNTS INDEXES	100
TABLE 97:	VIEW ACCOUNTS SYNONYMS	101
TABLE 98:	VIEW ACCOUNTS VIEWS	103
TABLE 99:	VIEW ACCOUNTS TRIGGERS	104
TABLE 100:	VIEW ACCOUNTS SEQUENCES	104
TABLE 101:	RMSAUTO ACCOUNT TABLE PRIVILEGES	104
TABLE 102:	RMSAUTO ACCOUNT TABLE EXTENTS	105
TABLE 103:	RMSAUTO ACCOUNT INDEXES	107
TABLE 104:	RMSAUTO ACCOUNT SYNONYMS	109
TABLE 105:	RMSAUTO ACCOUNT VIEWS	110
TABLE 106:	RMSAUTO ACCOUNT TRIGGERS	111
TABLE 107:	RMSAUTO ACCOUNT SEQUENCES	117
TABLE 108:	RMSMAN ACCOUNT TABLE PRIVILEGES	117
TABLE 109:	RMSMAN ACCOUNT TABLE EXTENTS	117
TABLE 110:	RMSMAN ACCOUNT INDEXES	121
TABLE 111:	RMSMAN ACCOUNT SYNONYMS	122
TABLE 112:	RMSMAN ACCOUNT VIEWS	123

TABLE 113:	RMSMAN ACCOUNT TRIGGERS	123
TABLE 114:	RMSMAN ACCOUNT SEQUENCES	124
TABLE 115:	CENTER ACCOUNT BY FUNCTION	124
TABLE 116:	CENTER ACCOUNT TABLE PRIVILEGES	124
TABLE 117:	CENTER ACCOUNT TABLE GROWTH	125
TABLE 118:	CENTER ACCOUNT INDEXES	125
TABLE 119:	CENTER ACCOUNT SYNONYMS	125
TABLE 120:	CENTER ACCOUNT SYNONYMS	125
TABLE 121:	CENTER ACCOUNT VIEWS	126
TABLE 122:	CENTER ACCOUNT TRIGGERS	126
TABLE 123:	CENTER ACCOUNT SEQUENCES	126

About this Document

This section describes the organization and content of the document and includes the following topics:

- Purpose
- Scope
- Audience
- Related Information
- Using this Document

About this Document

PURPOSE

This document provides an overview of the Prototype International Data Centre (PIDC) database configuration. It may also be used as a reference guide for verifying the configuration of the Oracle database accounts required by the application software.

This document is Revision 0.1 of *Configuration of PIDC Databases*, originally published March 1999. The following changes were made for this revision:

- General

  The publication date and document number in the footers for all main pages of the document were changed to reflect the revision. Change bars (vertical lines that appear in the margin) were added to identify new or revised material. The Notice Page was changed to include an explanation of the revision number, a reference to the Change Page, and a new SAIC number. A Change Page, which summarizes technical revisions to the document, was added after the Notice Page. Chapter numbers were added for Chapters 1 through 3.

- About this Document

  A description of changes to the document was added.

- Chapter 2: Database Interaction and Policies

  In Table 3 on page 13 the frequency for *AuxArchiver* was changed from "bi-weekly" to "daily".

  Because a new table, **lastid_arcdb**, was added to the database schema, wording in "Unique Identifier Generation Policy" on page 14 was changed from "The one definitive **lastid**" to "The primary **lastid**" and a new paragraph was added that describes the **lastid_arcdb** database table location and use.

- Chapter 3: Account Descriptions

  In this chapter, information about the new **lastid_arcdb** database table was added to the IDCX account and changes were made to the RMSAUTO account Triggers table to improve readability and to correct two obvious errors.

  Information about the **lastid_arcdb** table that was added in this chapter includes an additional bullet in the list of differences between the operational and archival versions of the accounts as well as new rows (and in some cases footnotes) in the tables that describe the functions (Table 13 on page 28), privileges (Table 14 on page 30), growth (Table 15 on page 33), and indexes (Table 16 on page 37) of the IDCX account.

  In the RMSAUTO account description several changes were made to Table 106 on page 111. To improve readability, the table was changed to a horizontal (landscape) format. Two errors were also corrected in this table; in the "Tables for Update" column, an extra underscore (_) was removed from "gards_efficiency_pairs_" and all of the tables that referred to the "rmman" account were corrected to "RMSMAN".

SCOPE

This document describes how the PIDC database instances and accounts interact with one another and provides lists of the base tables, views, indexes, synonyms, triggers, and sequences for each account. This document does not describe the detailed schema of the PIDC database tables or the correct configuration of the Oracle database management software.

AUDIENCE

This document is intended for scientists and technicians involved in the installation, operation, maintenance, and/or use of the PIDC database.

RELATED INFORMATION

Use this document in conjunction with *Database Schema* [IDC5.1.1Rev1].

The correct configuration of the Oracle database management software is vital to the successful operation of the application software but is beyond the scope of this document. This configuration is described in [deB98].

See "References" on page 127 for a listing of all the sources of information consulted in preparing this document.

USING THIS DOCUMENT

This document is organized as follows:

- Chapter 1: Overview

  This chapter describes the PIDC database instances, hardware and software requirements, and data flow.

- Chapter 2: Database Interaction and Policies

  This chapter describes how the PIDC database instances interact through database links and the migration of data from one instance to another. Policies for using and updating indexes, creating tables, and creating indexes are also described.

- Chapter 3: Account Descriptions

  In this chapter, the accounts of the PIDC databases are described through lists of tables, indexes, synonyms, views, triggers, and sequences for each account.

- References

  This section lists the sources cited in this document.

- Glossary

  This section defines the terms, abbreviations, and acronyms used in this document.

- Index

  This section lists topics and features provided in this document along with page numbers for reference.

Conventions

This document uses graphical, typographical, and naming conventions, as described in Tables I, II, and III. Table I shows data flow symbols used in figures of PIDC processes.

TABLE I: DATA FLOW SYMBOLS

Description	Symbol
process	
external source or sink of data	
data store	
control flow	
data flow	

Table II shows the typographical conventions followed throughout this document.

TABLE II: TYPOGRAPHICAL CONVENTIONS

Element	Font	Example
database table	**bold**	**dataready**
database table and attribute when written in the dot notation		**prodtrack.***status*
headings, figure titles, and table titles		About this Document
first time a Structured Query Language (SQL) command is used		**`select`** `time`
attributes of database tables when written separately	*italics*	*status*
processes and software units		*ParseSubs*
user-defined arguments		*delete-remarks* object
computer code and output	`courier`	`>(list 'a 'b 'c)`
filenames, directories, and websites		`amp.par`
text that should be typed in exactly as shown		`select time`
database accounts	CAPS	IDCX

Table III defines terms that are used in a specific context in this document. See the Glossary at the end of this document for a more general listing of terms, abbreviations, and acronyms.

TABLE III: TERMINOLOGY

Term	Description
account	user (owner) of an Oracle database; also used as shorthand for the collection of tables that were created by the user
archival database	database instance containing the tables that are kept permanently
base table	table of a database account (not a view, synonym, or sequence)

TABLE III: TERMINOLOGY (CONTINUED)

Term	Description
database link	connection between two instances of a Relational DataBase Management System (RDBMS)
delete privilege	privilege granted to users to delete rows from a database table using SQL
index	database object that enforces data uniqueness restrictions and improves data retrieval performance
insert privilege	privilege granted to users to insert rows into a database table using SQL
instance	all processes and system resources required to operate an Oracle database
migration	moving of a table or data from one database instance to another
network processing	seismic/hydroacoustic/infrasonic (S/H/I) processing of the combined results of station processing to detect and locate events
operational database	database instance containing the tables that are used for processing data and operating the system
origin beam	S/H/I array data directed to enhance signals from the origin of an event
post-analysis processing	S/H/I processing after interactive analysis to characterize events
recall processing	S/H/I station processing initiated either during interactive analysis or as part of automatic processing after interactive analysis
select privilege	privilege granted to users to select rows of a database table using SQL
sequence	database object to generate values for use as primary keys
station processing	S/H/I processing of station data to detect and characterize signals
synonym	alias for another database table, view or sequence; often used to access a database object owned by another user
tablespace	file or group of files used to store database data

TABLE III: TERMINOLOGY (CONTINUED)

Term	Description
testbed database	database instance for testing new software, tables, and so on
trigger	stored procedure executed automatically by Oracle upon the occurrence of a defined event
update privilege	privilege granted to users to update rows of a database table using SQL
view	database object derived logically from one or more tables, views and/or sequences

Chapter 1: Overview

This chapter provides an overview of the PIDC databases and includes the following topics:

- PIDC Database Instances
- Hardware and Software Requirements
- Schema
- S/H/I Data Flow

Chapter 1: Overview

PIDC DATABASE INSTANCES

The PIDC uses several instances of the Oracle relational database management system (RDBMS) to support operational and developmental activities. An instance is often referred to as a database. One instance is used for operation of the data processing pipeline, and another instance is used as the archive for the results of processing. In addition to these instances, two testbed instances of the RDBMS mimic the operational and archival instances. These testbed instances are used for developing and testing new software. Each instance of the RDBMS at the PIDC is run on a different hardware platform, known as a "host." The use of separate hosts reduces the risk of one database affecting the performance of another.

The operational database contains the tables necessary to support routine daily operations, including all import and export of raw data, all routine automatic processing, and all interactive analysis of data. Records remain in the operational database for three to six weeks, which keeps the database compact while providing an adequate buffer in case problems are identified and need to be corrected prior to migrating the data to the archival database.

The archival database contains all tables that may be of long-term interest and therefore worth preserving. Data migrate regularly from the operational database to the archival database. The archival database is the principal database used for evaluation of the PIDC products and processes.

The testbed databases simulate the operational databases. New tables are often created in the testbed databases to support integration testing of new application programs that require these tables. The testbed hosts are also used to test changes to the hardware, such as disk arrays, and Oracle software that are being considered for use on the operational database host. Thus, the testbed hosts may use different hardware and software than specified in the following sections.

HARDWARE AND SOFTWARE REQUIREMENTS

The application software requires two Oracle database instances. Three instances are currently used at the PIDC: one each for the operational and archival databases of the seismic, hydroacoustic, and infrasonic (S/H/I) technologies and one for the radionuclide database. Table 1 gives a summary of the hardware configuration of the PIDC database machines.

TABLE 1: DATABASE SERVER HARDWARE

Category	S/H/I Operational Database	S/H/I Archival Database	Radionuclide Database
Vendor	Sun Microsystems	Sun Microsystems	Sun Microsystems
Model	Enterprise Server 4000	SparcArray 1000	Enterprise Server 5000
Operating System	Solaris 2.6	Solaris 2.6	Solaris 2.6
CPUs	6 - 250 MHz UltraSPARC	5 - 40 MHz SuperSPARC	10 - 250 MHz UltraSPARC
RAM	1.5 GB	64 MB	2 GB (8 x 256 MB)
Internal Disk	4 GB (bootable disk, containing operating system, swap)	2 GB (bootable disk, containing operating system, swap)	two mirrored 4 GB (bootable disk, containing operating system, swap)
External Disk	RSM Array 2000, 315 GB	2 - Inline raid arrays (28 GB and 80 GB)	RSM Array 2000, 88 GB
Network Interfaces	Fast-Ethernet connected to OPS LAN	Fast-Ethernet connected to OPS LAN	Fast-Ethernet connected to OPS LAN

The current application software requires Oracle version 7.3.4. The detailed configuration of the Oracle server and client installation is given by [deB98]. Table 2 gives a summary of the baseline configuration required for application software and documents the product's installation as part of the Oracle Server/Oracle Client

package. The Oracle Server software is installed only on the Database Server (hardware configuration item (HWCI) 5.1), while the Client software is installed on the File Server (HWCI 6.1).

TABLE 2: ORACLE PRODUCTS FOR RDBMS INSTANCE

Product	Version	Function	Server/Client
Oracle7 Server (RDBMS)	7.3.4.1.0	Oracle Database	Server
Oracle7 Parallel Query Option		Parallel Query	Server
Oracle7 Distributed Database Option		Data Replication	Server
Oracle Server Manager		DBA Utility	Server
Oracle7 SQL*Net (v2)		Oracle Networking	Server/Client
PL/SQL (v2)	2.3.4.1.0	Procedural Language	Server/Client
Oracle7 JDBC Drivers		Java Database Connections	Server/Client
Multi-protocol Interchange		Proxy Networking	Server/Client
TCP/IP Protocol Adapter (V2)		TCP/IP Networking	Server/Client
SQL*Plus	3.3.4.0.1	Interactive Connections	Client
Developer2000	1.5.1.0.0	Graphical Interface	Client
Programmer/2000	7.3.4.0.0	Developer Libraries	Client

SCHEMA

A schema is a description of the tables that are contained in a database. The description includes the columns included in the tables, the primary, alternate and foreign keys of the tables, the relationships between tables (expressed as entity relationship diagrams), column descriptions, units of column values, the allowable ranges of column values, data storage types, and more. The PIDC schema is described in [IDC5.1.1Rev1].

S/H/I DATA FLOW

The flow of data through the instances and accounts of the S/H/I tables of the PIDC is shown in the models presented in Figures 1 through 6. A second instance of Oracle is required for data migration, archiving of waveforms, and some data export functions.

Figure 1 shows data import and station processing for S/H/I. Data from the International Monitoring Systems (IMS) are stored on the UNIX file system, and pointers to the data are incorporated into the IDCX database account. Auxiliary seismic data, request messages, and subscription messages are processed by the *Message* and *Subscription Subsystems*. The data are stored on the UNIX file system, and the data pointers and message information are kept in the IDCX account. Static station information is kept in the STATIC account and is used by the import processes. Station processing is performed on the waveform data in the IDCX account using the STATIC station information as input. The output of station processing is detection information, signal features, and preliminary origin information (seismic only) that is stored in the IDCX account.

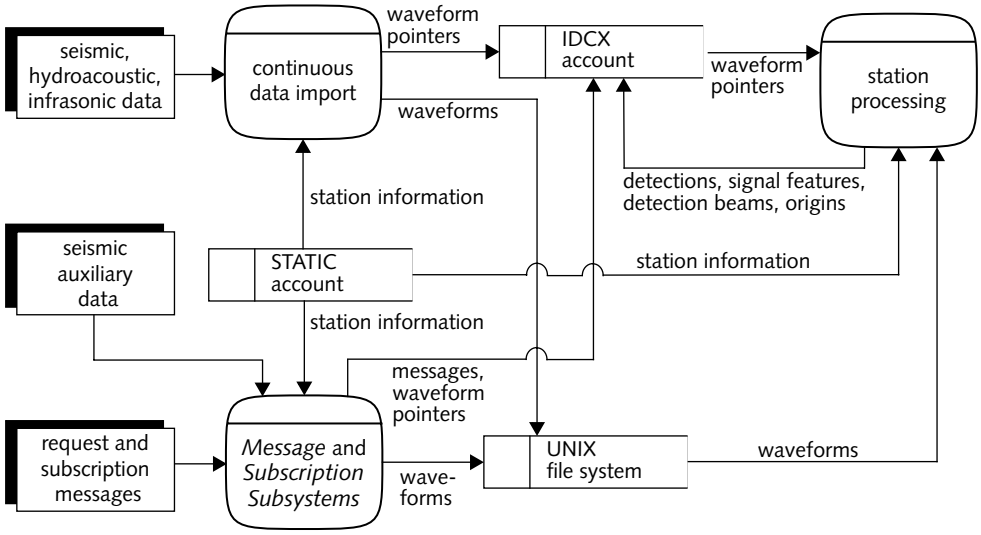

FIGURE 1. DATA IMPORT AND STATION PROCESSING MODEL

Figure 2 shows the network processing model. Detection information is obtained from the IDCX account, and static station information is obtained from the STATIC account. These data are processed to form the Standard Event Lists one through three (SEL1, SEL2, and SEL3), which contain the origin information for these successively more complete lists. The origins of the SEL1 account are used as input for the SEL2 processing, and the origins of the SEL2 account are used as the inputs for the SEL3 processing. Requests for auxiliary seismic data are made during SEL1 and SEL2 processing by inserting rows in the **request** table of the IDCX account. When the final automated event list, the SEL3, is completed, origin beams are created, and pointers to the beams are stored in the IDCX account in preparation for interactive analysis.

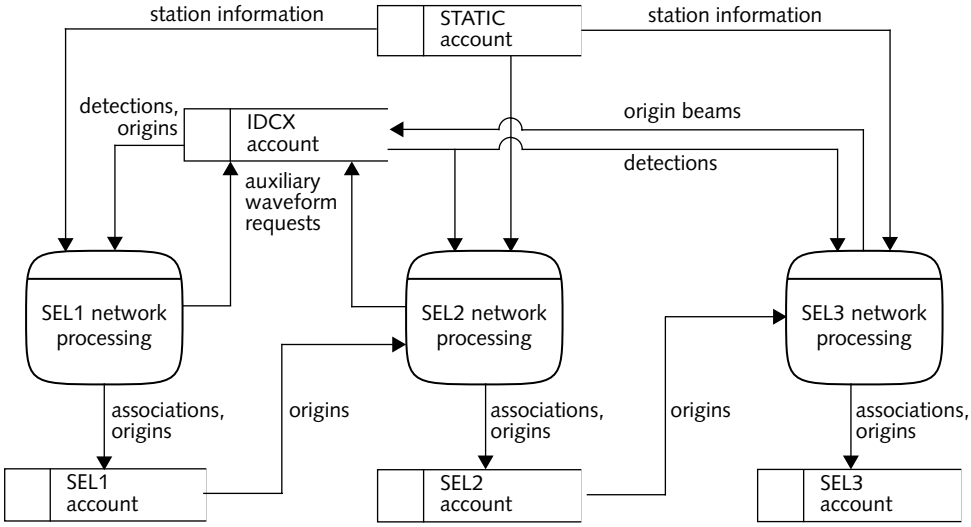

FIGURE 2. NETWORK PROCESSING MODEL

Figure 3 shows the Interactive analysis model, which uses the waveform and detection data in the IDCX account, the station information from the STATIC account, and the arrival, association, and origin information from the SEL3 account as input. The waveforms themselves are obtained from the UNIX file system. If the *Map* application is used, then the MAP account information is also read. All analyst

results are written to the Late Event Bulletin (LEB) account. When recall processing is necessary, the information and data required by the processing applications are obtained from the STATIC, IDCX, and LEB accounts as well as the UNIX file system. Results of recall processing are placed in the LEB account.

At the completion of interactive analysis, when the analysis has been checked for quality, the results are migrated to the Reviewed Event Bulletin (REB) account.

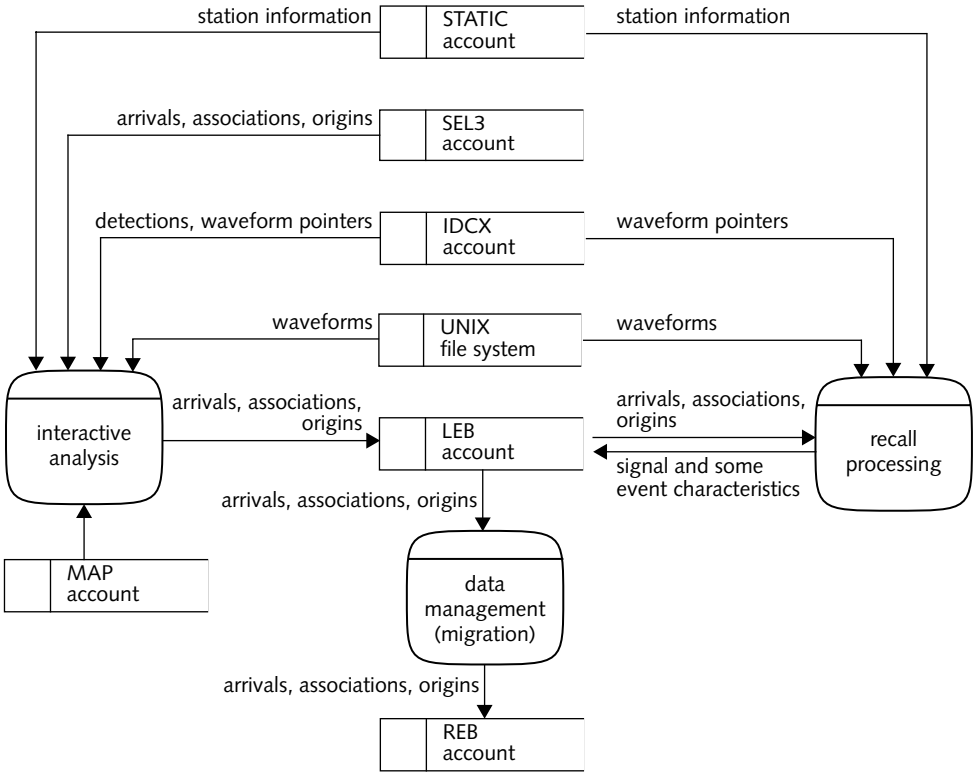

FIGURE 3. INTERACTIVE ANALYSIS MODEL

The VIEW accounts are used for viewing intermediate results and training analysts (see Figure 4). The inputs are the host event list or bulletin accounts (LEB, REB, SEL1, SEL2, SEL3) along with the STATIC and IDCX accounts. The outputs of this analysis are kept in the respective VIEW accounts (LEBVIEW, REBVIEW, and so on).

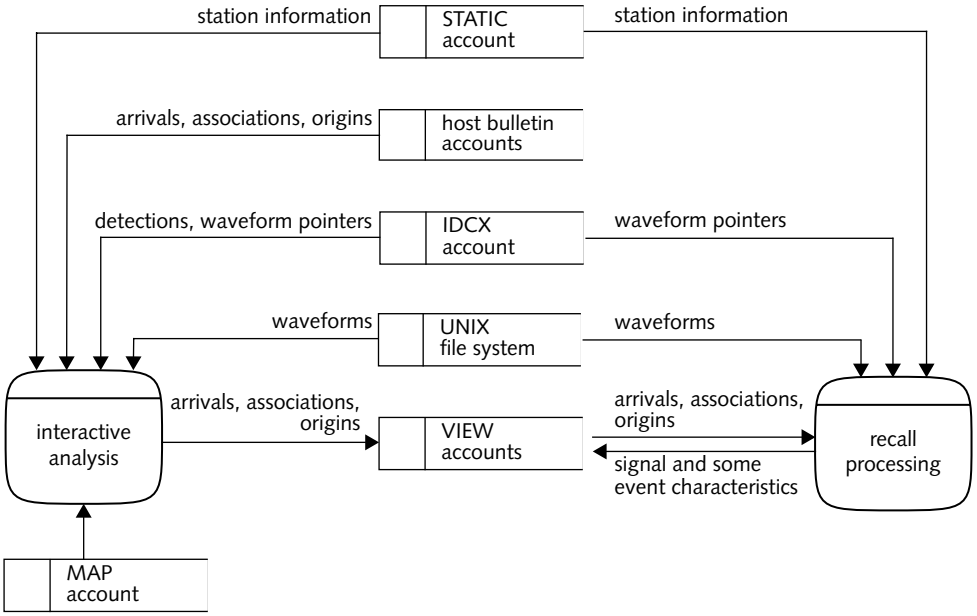

FIGURE 4. VIEWING AND INTERACTIVE ANALYST TRAINING MODEL

During post-analysis processing, signals and event characteristics are measured and the results are stored in the REB account. At the same time, waveform segments associated with the events in the REB are extracted from the waveforms and stored in the UNIX file system for easy distribution. Pointers to the waveform segments are stored in the SEGMENT account (see Figure 5).

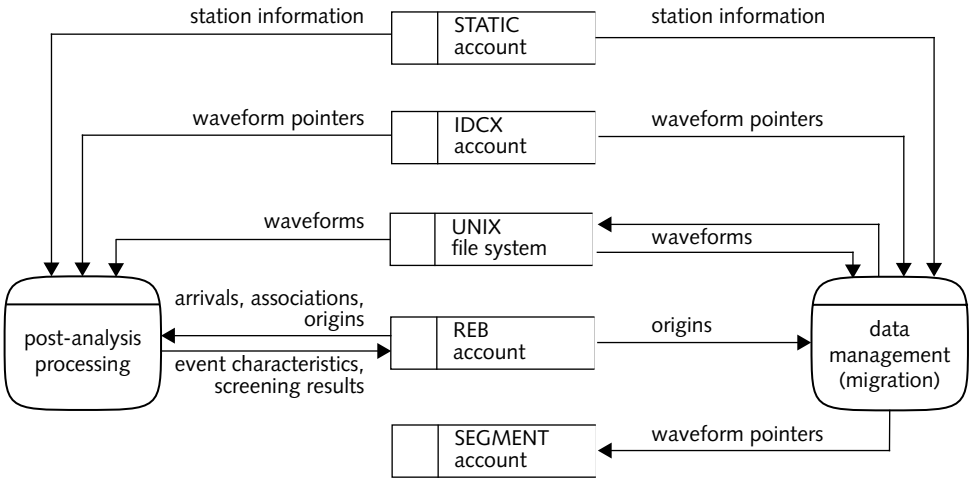

FIGURE 5. POST-ANALYSIS PROCESSING MODEL

Data export services and Migration of the database tables from the operational database to the archival database are depicted in Figure 6. The MIGRATE account contains the rules for migrating the data in the tables. The SEL1, SEL2, SEL3, SEGMENT, and IDCX accounts have recently inserted or updated parametric data migrated from the Operational database to the Archival database from two to eight hours after real time. A full migration of the STATIC account from the Operational database to the Archival database occurs once a day. Migration of the LEB and REB accounts from the Operational database to the Archival database is triggered by completion of analyst review. VIEW accounts are not migrated.

The data export function uses inputs from tables in the IDCX account and compiles products for requests or subscriptions from the appropriate database tables. Subscriptions are filled using the Operational database accounts, and requests are filled using the Archival database accounts. The results are distributed to the signatories of the Comprehensive Nuclear Test Ban Treaty (CTBT).

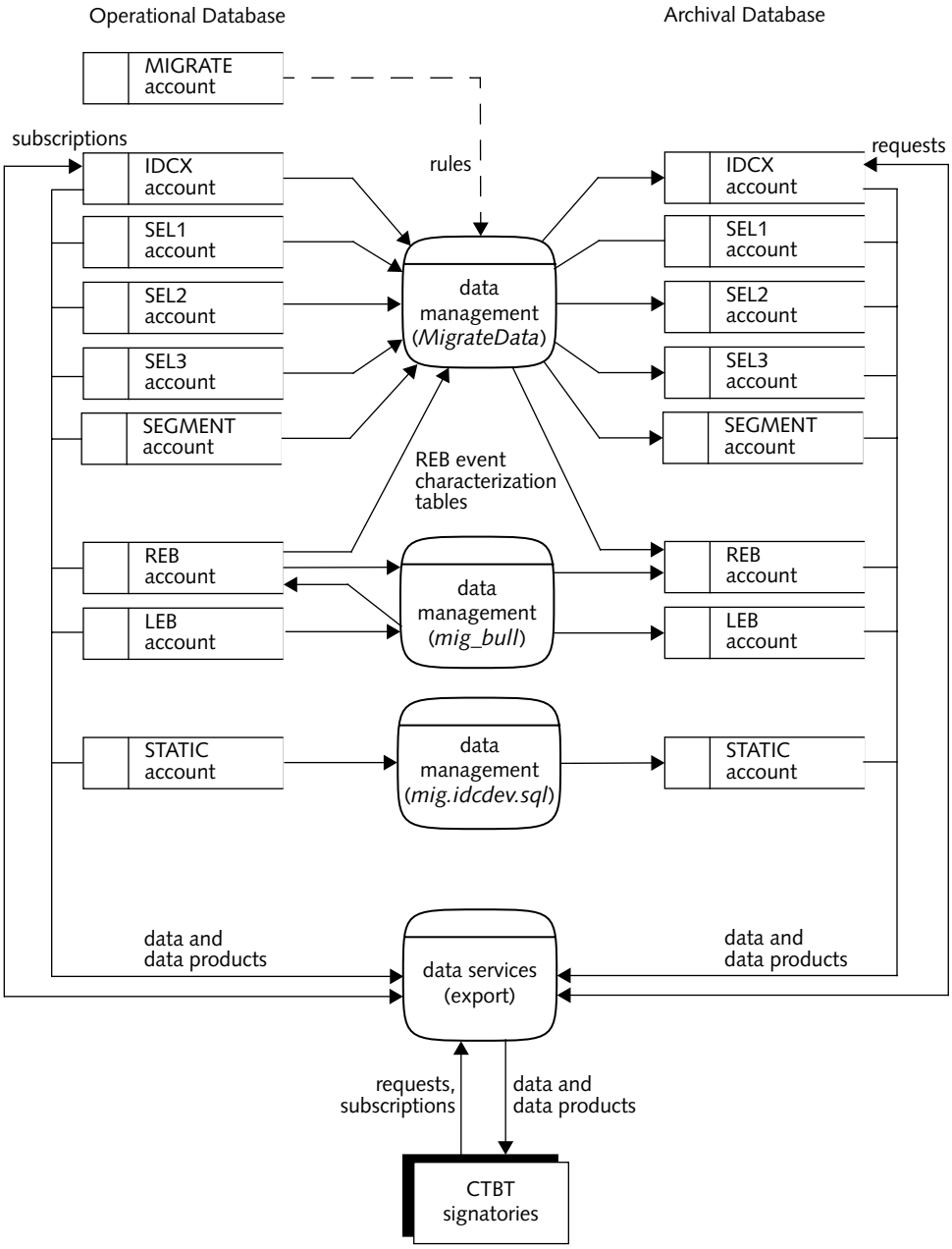

FIGURE 6. DATA MIGRATION AND EXPORT MODEL

Chapter 2: Database Interaction and Policies

This chapter describes the PIDC database instances and includes the following topics:

- Database Links
- Data Migration
- Unique Identifier Generation Policy
- Table Creation Policy
- Index Creation Policy
- Database Monitoring Policy

Chapter 2: Database Interaction and Policies

DATABASE LINKS

Database links allow distributed RDBMS instances to be treated like a single, integrated database. A link tells Oracle how to get from one database to another and includes a communications protocol (such as Transmission Control Protocol/Internet Protocol [TCP/IP]), the name of the remote database host, the name of the remote database, a valid account name in the remote database, and the account password. Database links may be private, meaning that only a single user account may use the link, or public, meaning that any user account may use the link. Only private database links are used at the PIDC.

Some applications (for example, *Xlogger*) connect only to the archival database but need access to the **lastid** table, which is kept current in the operational database. Database links are combined with synonyms to effectively make the **lastid** table available on the archival database. For instance, the **lastid** synonym in the SEL1 account on the archival database points to the **lastid** table in the IDCX account on the operational database.

DATA MIGRATION

Data are migrated from the operational database to the archival database through *SQL* scripts or *C* programs, depending on the application. Database triggers, often used to trigger the migration of data, require that both instances of the RDBMS be operational simultaneously and thus are not used at the PIDC for migration. Instead, the applications that migrate the data are subject to operational procedures that ensure both databases are available when the applications are run.

Links can be used to migrate data between instances and to make a table resident in one database available to software connecting to a different database. A simple migration of the STATIC account on the operational database is used to maintain the same information on the archival database. The STATIC account is maintained solely on the operational database. The STATIC account on the archival database is kept current by running a *SQL* script once a day that copies the table data across the link.

Table 3 lists the applications that migrate data, the source tables, destination tables, and frequency of migration.

TABLE 3: MIGRATION FROM OPERATIONAL TO ARCHIVAL DATABASE

Application	Operational Database Source	Archival Database Destination	Frequency
MigrateData (*C* program)	all tables of IDCX, SEL1, SEL2, SEL3, and some REB tables	corresponding tables of IDCX, SEL1, SEL2, SEL3, and REB	hourly
mig_bull (*SQL* script)	all LEB tables	corresponding LEB and REB tables	daily (on demand)
mig.idcdev.sql (*SQL* script)	all STATIC tables	corresponding STATIC tables	daily
PrimaryArchiver (*C* program)	IDCX.**wfdisc**	IDCX.**wfdisc**	daily
AuxArchiver (*C* program)	IDCX.**wfdisc**	IDCX.**wfdisc**	daily

With the exceptions of the STATIC and REB account tables, after data have been migrated from the operational to the archival database they are purged from the operational database. Data are purged on a regular schedule, therefore, purging need not immediately follow migration.

UNIQUE IDENTIFIER GENERATION POLICY

Many tables in the PIDC schema include a column referred to as an "ID" that contains unique numbers as a primary or alternate key. Many applications may have read and write privileges for these tables, so a method for ensuring the uniqueness of the ID is required. For some tables, an Oracle sequence is used. For other tables, unique IDs are obtained from the **lastid** table. When a sequence is used, Oracle guarantees the uniqueness of the number obtained. When the **lastid** table is used, however, the procedures are necessary:

1. Obtain numbers from the **lastid** table by using "`select for update`." This procedure places a lock on the **lastid** table, thereby blocking other applications that are also seeking to obtain a unique identifier for the same *keyname*.
2. Immediately increment the *keyvalue* with an update query and commit the transaction. This procedure frees the lock allowing the next application to obtain a unique identifier.

The primary **lastid** table resides in the IDCX account. Numerous applications connecting to different accounts must have access to the **lastid** table. Therefore, update privileges on the **lastid** table are granted to a number of accounts.

An additional **lastid** table called **lastid_arcdb** resides in the IDCX account in the archival database. This table must be used by the *Archive* application to get *wfid*s for inserting into the **wfdisc** table in the archival database.

TABLE CREATION POLICY

Table creation and deletion is in general restricted to installation and maintenance tasks. The majority of application programs connecting to the operational database do not create or drop tables. Notable exceptions are *ARS*, *MigrateData*, and *rebqc* (in the LEB account), which create and drop tables as part of routine operations. Tables that are not included in this document and are not created by application software should not be created in the operational accounts.

The proper creation and maintenance of the tables in an account are important to achieving maximum performance and efficient use of resources. In addition, privileges can be selectively applied to maintain data security while still providing flexibility.

Much of the nomenclature used in this section is specific to Oracle and RDBMS (see [Koc97] for explanations of the terms used, [Lon97], and [Urm96]).

The following rules define a general policy for table creation. Specific information for each required table, including sizing information, is provided later in this document.

1. All tables in a given account should be created in a single common tablespace.
2. Tables should be created with `select` privileges granted to all users. Exceptions are tables that contain potentially sensitive information about users of the system. Specifically, special care should be taken with the **datausers**, **ftplogin**, **subs**, and **subsusers** tables.
3. The `grant` option should be included for all `select` privileges.
4. Privileges for `insert`, `update` or `delete` should not be granted unless absolutely necessary and should be granted to individual accounts only, in other words, not to PUBLIC. The `grant` option should not be included for `insert`, `update` or `delete` privileges.
5. All tables should be created with `pctfree = 10`, and `pctused = 40`.
6. All initial and next extent values should be at least 100k.
7. Extent sizes should be no larger than 500m.
8. All `initial extent` and `next extent` values should be chosen from a defined list of values. Completely arbitrary `initial extent` and `next extent` values should be avoided so that extents freed upon the dropping of one table can be fully allocated for a new object. The suggested extent sizes are 100k, 200k, 500k, 1m, 2m, 5m, 10m, 20m, 50m, 100m, 200m, and 500m. (Many of the tables in the PIDC databases do not adhere to the suggested extent sizes due to limited resources for making the necessary changes to the existing tables.)

9. Tables that are relatively static in size should have an `initial extent` value closely matching the maximum size of the table. This rule includes both tables that normally grow with time but are purged, for example the **wftag** table in the SEL3 account, and tables that are inherently static, for example the **gregion** table.
10. Tables that are relatively static in size should have a `next extent` value equalling 10% – 20% of the initial extent size.
11. Tables that grow unbounded in time (for example the **arrival** table in the IDCX account) should be sized in accordance with the growth rate. Under the assumption that major upgrades of the database server software/hardware will occur approximately every three years, the initial size of the table should accommodate all the current data plus an additional one year's worth of new data. If the `initial extent` size required is less than 500m, then a single initial extent should be allocated. If the `initial extent` size required is greater than 500m, several 500m extents should be allocated for the initial storage.
12. For tables that grow unbounded in time, the `next extent` size should be chosen to accommodate approximately one month's worth of new data.

INDEX CREATION POLICY

The performance of a database is closely related to the indexing of tables. Because the creation or dropping of arbitrary indexes can cause Oracle to choose different execution plans (resulting in possibly degraded performance), all indexes should be maintained with the same level of vigilance as the tables themselves. The policies for sizing the extents for indexes are similar to those of the tables.

The following rules provide a general policy for creating indexes. Specific information for each required index, including sizing information, is provided later in this document.

1. All indexes should reside in a common tablespace, distinct from the tablespace used for the tables themselves.

2. All indexes should be owned by the owner of the tables. In other words, other users (accounts) should be prohibited from creating indexes on foreign tables. This can be accomplished by granting the `create index` privilege rather than the `create any index` privilege.
3. Indexes should be created with `pctfree = 0`, unless the indexed field is a variable length and gets updated. In this case the `pctfree` should be 10 (for example, for the index on the *status* column of the **msgdisc** table).
4. All initial and `next extent` values should be at least 100k.
5. Extent sizes should be no larger than 500m.
6. All `initial` and `next extent` values should be chosen from a defined list of values: 100k, 200k, 500k, 1m, 2m, 5m, 10m, 20m, 50m, 100m, 200m, 500m.
7. Indexes that are relatively static in size should have an `initial extent` value closely matching the maximum size of the index.
8. Indexes that are relatively static in size should have a `next extent` value equalling 10 – 20% of the initial extent size.
9. Indexes that grow unbounded in time should be sized in accordance with the growth rate (see items 11 and 12 of the Table Creation Policy).
10. New indexes should not be arbitrarily created, and old indexes should not be arbitrarily dropped.
11. Each table should have one unique index if only one or two columns are needed for the index.

DATABASE MONITORING POLICY

The following rules provide a general policy to the Database Administrator for monitoring the database.

1. The Database Administrator should monitor all tables daily. Whenever the number of extents for a given table exceeds 50, the table should be exported, the extents compressed, and the table then re-imported with the extent sizes tuned to match the growth rate (see items 9 – 12 in the Table Creation Policy).
2. The Database Administrator should monitor all indexes daily. Whenever the number of extents for a given index exceeds 50, the table and associated indexes should be exported, the extents compressed, and then re-imported with the extent sizes tuned to match the growth rate (see items 7 – 10 in the Index Creation Policy).

Chapter 3: Account Descriptions

This chapter describes the contents of the PIDC database accounts and includes the following topics:

- Introduction
- IDCX Account
- LEB Account
- MAP Account
- MIGRATE Account
- REB Account
- SEGMENT Account
- SEL1 Account
- SEL2 Account
- SEL3 Account
- STATIC Account
- VIEW Accounts
- RMSAUTO Account
- RMSMAN Account
- CENTER Account

Chapter 3: Account Descriptions

INTRODUCTION

The accounts described in this document are categorized as S/H/I processing and analysis accounts, radionuclide processing and analysis accounts, or access accounts. Table 4 presents a summary of these accounts.

The first set of accounts, IDCX, LEB, MAP, MIGRATE, REB, SEGMENT, SEL1, SEL2, SEL3, STATIC, and VIEW, is used for processing and analyzing the time-series data. The time-series software has been designed so several users share a single database account.

The second set of accounts, RMSAUTO and RMSMAN, is used for processing and analyzing the radionuclide data.

The final account (CENTER) in Table 4 is a publicly accessible account that is made available for staff who monitor operations. The application software does not depend on the existence of the CENTER account.

The account summaries in this chapter document the configuration of the accounts as they exist on the operational database. Except for the "VIEW" accounts (LEBVIEW, REBVIEW, SEL1VIEW, and so on), the accounts in the operational database should be replicated on the archival database including the presence and configuration of all the base tables, indexes, views, and synonyms. The archival versions of the accounts should differ from the operational versions in a few critical ways:

- All triggers in the archival database should be disabled.
- All accounts in the archival database should include a database link to the corresponding account in the operational database.
- All accounts in the archival database should have **lastid** as a synonym across the database link.

- Table **lastid_arcdb** is meant to be used only by the *Archive* application to obtain a unique ID (*wfid*) for waveform archiving.
- Initial and next extent sizes may be different between the operational and archival databases (both the operational and archival extent sizes are given in the table descriptions).
- The operational database has limited access, whereas the archival database can be accessed by any PIDC user through the CENTER account.

As these accounts are evolving in an operational environment, the PIDC configuration of the tables as well as their tablespaces shown in Table 4 differ from the ideal configuration. The tables, views, synonyms, sequences and indexed columns that *should* exist in each account for the operational and archival databases are listed, but the descriptive information is from the PIDC databases and should not be construed as ideal. Some recommendations for database configuration that have been implemented for IDC Release 2 have not yet been implemented in the PIDC databases.

TABLE 4: SUMMARY OF DATABASE ACCOUNTS

Account	Function	Default Tablespace	Index Tablespace
Processing and Analysis of S/H/I Data			
IDCX	central account and data repository for time-series processing	IDC	IDCNDX
LEB	interactive review of SEL3	IDC	IDCNDX
MAP	support of *Map* application	IDC	IDCNDX
MIGRATE	support of data migration	IDC	IDCNDX
REB	Reviewed Event Bulletin	IDC	IDCNDX
SEGMENT	waveform segments	IDC	IDCNDX
SEL1	Standard Event List 1	IDC	IDCNDX
SEL2	Standard Event List 2	IDC	IDCNDX
SEL3	Standard Event List 3	IDC	IDCNDX

TABLE 4: SUMMARY OF DATABASE ACCOUNTS (CONTINUED)

Account	Function	Default Tablespace	Index Tablespace
STATIC	static tables and IMS station descriptions	IDC	IDCNDX
VIEW	viewing and analyst training	IDC	IDCNDX
Processing and Analysis of Radionuclide Data			
RMSAUTO	automatic radionuclide processing	RMS	RMSNDX
RMSMAN	manual radionuclide processing	RMS	RMSNDX
Access			
CENTER	public access	USERS	USERS

Three different tablespaces are listed in Table 4. The IDC and IDCNDX tablespaces are reserved for the accounts used by application software. Any other account created on the operational database server should be restricted to the USERS tablespace.

The following sections describe each of the accounts listed in Table 4. An account is composed of a number of different objects including base tables, indexes, synonyms, views, triggers, and sequences. The objects of each account are described by their attributes. The structures of the database tables and their keys are not described. That information is documented in [IDC5.1.1Rev1].

Table 5 lists the base tables and views, grouped by primary function. Many database tables are necessary components of two or more functional groups.

TABLE 5: FUNCTIONAL GROUPS

Attributes	Definition
function	name of the functional group
tables and views	table or view owned by the account and belonging to the functional group
description	general description of the functional group; the description includes a list of the application programs that depends on the tables of the group, additional base tables and views in the account that are not primarily assigned to the functional group, and the synonyms of base tables and views from other accounts that supplement the group.

Each account contains a number of base tables, each of which has several attributes that are critical to the maintenance of the table in an operational setting. The attributes for both the operational and archival databases are defined in Table 6 and Table 7.

In the account descriptions of table privileges (described in Table 6), the PIDC configuration as of 15 March 1999 is provided. Footnotes are used to indicate tables that did not exist in the PIDC accounts on this date.

In the account descriptions of table growth (described in Table 7), if a table did not exist in the PIDC account as of 15 March 1999, only the table name is given and information on the table extents is left blank.

TABLE 6: TABLE PRIVILEGES

Attributes	Definition
table name	name of the table

TABLE 6: TABLE PRIVILEGES (CONTINUED)

Attributes	Definition
insert privilege	list of external accounts that have been granted the insert privilege for this table. Parentheses are used to provide information about the archival tables.
update privilege	list of external accounts that have been granted the update privilege for this table. Parentheses are used to provide information about the archival tables.
delete privilege	list of external accounts that have been granted the delete privilege for this table. Parentheses are used to provide information about the archival tables.

TABLE 7: TABLE GROWTH

Attributes	Definition
table name	name of the table
new rows per month	thousands of rows per month added to the table. If the table does not grow with time, the field is left blank.
rows per block	average number of rows stored in a single block within Oracle. The block size is 4096 bytes. In combination with the growth rate, the rows per block can be used to compute a candidate next extent size: (next extent size) = 1000 (new rows per month) 4096 / (rows per block). If the table does not grow with time, the field is left blank.
initial extent	size of the initial extent for the table. "m" indicates megabytes, and "k" indicates kilobytes. Parentheses are used to give the sizes of the archival database extents.
next extent	size of the next extent for the table. Parentheses are used to give the sizes of the archival database extents.
percent increase	percentage that each extent increases over the previous extent. Parentheses are used to provide information about the archival tables.

All of the large tables and most of the static tables will have one or more indexes to enhance performance. For multi-column indexes, the order of the columns is critical. Table 8 defines important attributes of indexes. Information for both the operational and archival databases is included in these descriptive tables.

In the account descriptions of the indexes, only the recommended indexes are listed even though other indexes may exist at the PIDC. If one of the recommended indexes did not exist at the PIDC as of 15 March 1999, then only the table name and indexed columns are listed; the index name and extents are left blank.

TABLE 8: INDEXES

Attributes	Definition
table name	name of the table.
indexed columns	columns that are indexed. The order of these columns is important.
index name	name of the index. Parentheses are used to give the archival table index name if the name is different from the operational index name.
unique?	uniqueness. Indexes can be specified to enforce uniqueness of the values contained in the indexed column or combination of columns. A "(u)" following the index name indicates that a unique index was created and Oracle will guarantee the uniqueness.
initial extent	size of the initial extent for the index. Parentheses are used to provide information about the archival tables.
next extent	size of the next extent for the index. Parentheses are used to provide information about the archival tables.

Table 9 shows significant attributes of synonyms. The synonym name attributes list recommended synonyms for the accounts. Footnotes indicate if a recommended synonym did not exist at the PIDC as of 15 March 1999.

TABLE 9: SYNONYMS

Attributes	Definition
synonym name	name of the synonym
account	account owning the table that is referenced in the synonym
table	table that is referenced by the synonym. If the table being referenced is resident on a remote database, the syntax of the table name includes the database link name, for example, **table_name@link_name**. Parentheses are used to provide information about the archival tables.
description	description of the synonym. Typically, the function of the synonym will be the same as the function of the table being referenced (just resident in a different account). In some cases, however, the synonym is truly an alias allowing the table to be used in different accounts for different purposes. The description summarizes the intended use, particularly by listing the functional groups that depend on the synonym.

Table 10 defines critical attributes of views. The view name attributes list recommended views for the accounts. In the account descriptions, the views listed are those that are recommended. Footnotes indicate if a recommended view did not exist at the PIDC as of 15 March 1999.

TABLE 10: VIEWS

Attributes	Definition
view name	name of the view
tables	list of all tables included in the view. Parentheses are used to provide information about the archival tables.
description	description of the purpose and functionality of the view

Table 11 defines the most important attributes of triggers. The full PL/SQL procedure source code can be obtained from the Oracle data dictionary. Triggers exist only on the operational database.

TABLE 11: TRIGGERS

Attributes	Definition
trigger name	name of the trigger
table	name of the table on which a trigger event occurs
type	timing of the triggered event; `before`, `after`, or `instead of` the triggering transaction
event	event that causes a trigger; `delete`, `insert`, or `update`
tables for select	tables containing values used by the trigger procedure
tables for update	tables modified by the trigger procedure

Table 12 defines significant attributes of required sequences.

TABLE 12: SEQUENCES

Attributes	Definition
sequence name	name of the sequence
increment	value of the increment by parameter
maxvalue	value of the maxvalue parameter
minvalue	value of the minvalue parameter
cache	cache size, or nocache
description	purpose and functionality of the sequence

IDCX ACCOUNT

The IDCX account contains the base tables for critical functions of the S/H/I automated system. These functions are data import/export, station processing, system monitoring, and general schema administration (for example, repository of the **lastid** table).

Applications that connect to the IDCX account derive the connect string by referring to the symbolic name `IDCXDB`. For example, the parameter file for an application would include the following line:

```
database=$(IDCXDB).
```

Table 13 categorizes the IDCX account by functions.

TABLE 13: IDCX ACCOUNT BY FUNCTION

Function	Tables and Views	Description
continuous data import	**alphasite** **dlfile** **dlman** **wfaux** **wfconv** **wfdisc** **wfproto**	applications: *ConnMan*, *DLMan*, *Mkloop*, *UnMkloop* other tables: **lastid**, **timestamp** synonyms: **affiliation**, **instrument**, **sensor**, **site**, **siteaux**, **sitechan**, **stanet**
forwarding	**fwfile** **fwgap** **fwsite** **outage**	applications: *AlphaForward*, *AlphaDLHeap* other tables: **dlman**
station processing	**amp3c** **ampdescript** **amplitude** **apma** **arrival** **assoc** **detection** **hydro_features** **infra_features** **origerr** **origin** **stassoc** **wftag**	applications: *DFX*, *StaPro* other tables, **wfdisc** synonyms: **affiliation**, **instrument**, **sensor**, **site**, **siteaux**, **sitechan**

TABLE 13: IDCX ACCOUNT BY FUNCTION (CONTINUED)

Function	Tables and Views	Description
Message Subsystem	**datauser** **ftpfailed** **ftplogin** **msgaux** **msgdatatype** **msgdest** **msgdisc** **xtag**	applications: *Message Subsystem* other tables: **lastid**, **wfdisc**, **wftag** synonyms: **affiliation**, **instrument**, **sensor**, **site**, **siteaux**, **sitechan**
Subscription Subsystem	**dataready** **evchar_prod** **fileproduct** **fpdescription** **prodtrack** **productcriteria** **producttypeevpars** **producttypeorigin** **producttypesta** **subs** **subsuser**	applications: *Subscription Subsystem* other tables: **lastid**, **wfdisc**, **wftag**, *Message Subsystem* tables synonyms: **affiliation**, **instrument**, **sensor**, **site**, **siteaux**, **sitechan**
DACS	**interval** **request** **timestamp**	applications: *tis_server*, *ticron_server*, *dbserver*, *WorkFlow*, *dispatch* and so on other tables: **wfdisc** synonyms: **affiliation**
schema administration	**lastid** **lastid_arcdb** **na_value** **problastid** **remark**	applications: most major applications **lastid_arcdb** only resides in the archival database account and is only used by the *Archive* application
system monitoring	**problem** **problemlog** **problemmail**	applications: *Xlogger* synonyms: **sitepoll**

Table 14 provides table privilege information for the IDCX account.

TABLE 14: IDCX ACCOUNT TABLE PRIVILEGES

	Operational (Archival) Privileges		
Table Name	**Insert**	**Update**	**Delete**
alphasite			
amp3c		MIGRATE	MIGRATE
	(SEL1, SEL2, SEL3)	(MIGRATE, SEL1, SEL2, SEL3)	(MIGRATE, SEL1, SEL2, SEL3)
ampdescript			
amplitude	public	public	MIGRATE, SEL1, SEL2, SEL3
	(MIGRATE, SEL1, SEL2, SEL3)	(MIGRATE, SEL1, SEL2, SEL3)	(MIGRATE, SEL1, SEL2, SEL3)
apma	SEL1, SEL2, SEL3	MIGRATE, SEL1, SEL2,SEL3	MIGRATE, SEL1, SEL2, SEL3
	(SEL1)	(MIGRATE, SEL1)	(MIGRATE, SEL1)
arrival	SEL1, SEL2, SEL3	MIGRATE, SEL1, SEL2, SEL3	MIGRATE, SEL1, SEL2, SEL3
	(SEL1, SEL2, SEL3)	(MIGRATE, SEL1, SEL2,SEL3)	(MIGRATE, SEL1, SEL2, SEL3)
assoc[1]			
dataready			MIGRATE
		(MIGRATE)	(MIGRATE)
datauser[1]			
detection	SEL1	MIGRATE, SEL1	MIGRATE, SEL1
	(SEL1)	(MIGRATE, SEL1)	(MIGRATE, SEL1)
dlfile			
dlman			
evchar_prod		MIGRATE	MIGRATE
fileproduct[1]	RMSMAN, RMSAUTO	RMSMAN, RMSAUTO	

TABLE 14: IDCX ACCOUNT TABLE PRIVILEGES (CONTINUED)

	Operational (Archival) Privileges		
Table Name	**Insert**	**Update**	**Delete**
fpdescription[1]		RMSMAN, RMSAUTO	
ftpfailed		(MIGRATE)	MIGRATE (MIGRATE)
ftplogin[1]			
fwfile			
fwgap			
fwsite			
hydro_features	(MIGRATE, SEL1, SEL2, SEL3)	MIGRATE (MIGRATE, SEL1, SEL2, SEL3)	MIGRATE (MIGRATE, SEL1, SEL2, SEL3)
infra_features	(MIGRATE)	MIGRATE (MIGRATE)	MIGRATE (MIGRATE)
interval	MIGRATE, SEL1, SEL2, SEL3 (MIGRATE, SEL1, SEL2, SEL3)	MIGRATE, SEL1, SEL2, SEL3 (MIGRATE, SEL1, SEL2, SEL3)	MIGRATE, SEL1, SEL2, SEL3 (MIGRATE, SEL1, SEL2, SEL3)
lastid[2]	MIGRATE, SEL1, SEL2, SEL3	All except CENTER	
lastid_arcdb[3]			
msgaux		(MIGRATE)	MIGRATE (MIGRATE)
msgdatatype		(MIGRATE)	MIGRATE (MIGRATE)
msgdest		(MIGRATE)	MIGRATE (MIGRATE)
msgdisc		(MIGRATE)	MIGRATE (MIGRATE)

TABLE 14: IDCX ACCOUNT TABLE PRIVILEGES (CONTINUED)

	Operational (Archival) Privileges		
Table Name	**Insert**	**Update**	**Delete**
na_value			
origerr[1]			
origin[1]			
outage[4]			
problem[5]	(public)	(public)	(public)
problemlog[5]	(public)	(public)	(public)
problemmail[5]	(public)	(public)	(public)
prodtrack		(MIGRATE)	MIGRATE (MIGRATE)
productcriteria[1]			
producttypeevpars[1]			
producttypeorigin[1]			
producttypesta[1]			
remark			
request	LEB, SEL1, SEL2, SEL3 (SEL1, SEL2, SEL3)	LEB, SEL1, SEL2, SEL3 (SEL1, SEL2, SEL3)	MIGRATE, LEB, SEL1, SEL2, SEL3 (MIGRATE, SEL1, SEL2, SEL3)
stassoc	SEL1, SEL2, SEL3 (SEL1, SEL2, SEL3)	SEL1, SEL2, SEL3 (MIGRATE, SEL1, SEL2, SEL3)	MIGRATE, SEL1 (MIGRATE, SEL1, SEL2)
subs		(MIGRATE)	(MIGRATE)
subsuser		(MIGRATE)	(MIGRATE)
timestamp	SEL1, SEL2 (SEL1, SEL2)	SEL1, SEL2, SEL3 (SEL1, SEL2, SEL3)	

TABLE 14: IDCX ACCOUNT TABLE PRIVILEGES (CONTINUED)

	Operational (Archival) Privileges		
Table Name	**Insert**	**Update**	**Delete**
wfaux			MIGRATE
wfconv			
wfdisc[3]	SEL1, SEL2, SEL3	SEL1, SEL2	MIGRATE, SEL1, SEL2, SEL3
wftag			
xtag[1]			

1. did not exist in the archival IDCX account at the PIDC on 15 March 1999
2. **lastid** exists only on the operational IDCX account
3. **lastid_arcdb** exists only in the archival IDCX account; the *Archive* application is the only application that should delete or insert records into the IDCX.**wfdisc** table in the archival database
4. did not exist in either IDCX account at the PIDC on 15 March 1999
5. did not exist in the operational IDCX account at the PIDC on 15 March 1999

Table 15 provides table growth information for the IDCX account.

TABLE 15: IDCX ACCOUNT TABLE GROWTH

			3/15/99 Operational (Archival)		
Table Name	**New Rows per Month in 1,000s**	**Rows per Block**	**Initial Extent**	**Next Extent**	**Percent Increase**
alphasite			12k (100k)	152k (100k)	50 (0)
amp3c	680	64	170m (500m)	10m (100m)	0 (0)
ampdescript			100k (100k)	100k (100k)	0 (0)

TABLE 15: IDCX ACCOUNT TABLE GROWTH (CONTINUED)

Table Name	New Rows per Month in 1,000s	Rows per Block	3/15/99 Operational (Archival)		
			Initial Extent	Next Extent	Percent Increase
amplitude	340	37	241m (657m)	10m (200m)	0 (0)
apma	290	23	180m (500m)	10m (100m)	0 (0)
arrival	340	24	200m (500m)	10m (100m)	0 (0)
assoc	33	35	57m	1m	0
dataready		75	26m (11m)	1m (5m)	0 (0)
datauser			12k	152k	50
detection	340	30	160m (500m)	10m (100m)	0 (0)
dlfile			5m (5m)	500k (500k)	0 (0)
dlman			100k (100k)	100k (100k)	0 (0)
evchar_prod			10m (10m)	8m (8m)	50 (50)
fileproduct			5m	5m	0
fpdescription			200k	200k	0
ftpfailed	< 1	63	10m (100k)	1m (100k)	0 (0)
ftplogin			100k	100k	0
fwfile			100k (100k)	100k (100k)	0 (0)

TABLE 15: IDCX ACCOUNT TABLE GROWTH (CONTINUED)

Table Name	New Rows per Month in 1,000s	Rows per Block	3/15/99 Operational (Archival)		
			Initial Extent	Next Extent	Percent Increase
fwgap			100k (100k)	100k (100k)	0 (0)
fwsite			200k (200k)	200k (200k)	0 (0)
hydro_features	61	20	100m (200m)	10m (200m)	0 (0)
infra_features			12k (5m)	1m (2m)	50 (0)
interval	190	65	50m (1500m)	10m (200m)	0 (0)
lastid			100k	100k	0
lastid_arcdb[1]			(100k)	(100k)	(0)
msgaux	< 1	120	4m (1m)	100k (200k)	0 (0)
msgdatatype	< 1	75	100m (50m)	10m (10m)	0 (0)
msgdest	< 1	46	150m (200m)	20m (20m)	0 (0)
msgdisc	< 1	22	400m (320m)	50m (100m)	0 (0)
na_value			100k (100k)	100k (100k)	0 (0)
origerr	4	30	24m	1m	0
origin	4	26	15m	1m	0
outage					
problem	< 1	42	(500k)	(100k)	(0)

TABLE 15: IDCX ACCOUNT TABLE GROWTH (CONTINUED)

Table Name	New Rows per Month in 1,000s	Rows per Block	3/15/99 Operational (Archival) Initial Extent	Next Extent	Percent Increase
problemlog	< 1	52	(600k)	(100k)	(0)
problemmail	< 1	56	(100k)	(100k)	(0)
prodtrack		89	1m (6m)	500k (1m)	0 (0)
productcriteria		33	100k	100k	0
producttypeevpars			1m	1m	50
producttypeorigin			100k	100k	0
producttypesta			200k	200k	0
remark			200k (100k)	100k (100k)	0 (0)
request			80m (275m)	10m (10m)	0 (0)
stassoc	29	37	13m (70m)	1m (5m)	0 (0)
subs		35	100k (100k)	100k (100k)	0 (0)
subsuser		47	100k (100k)	100k (100k)	0 (0)
timestamp			100k (100k)	100k (100k)	0 (0)
wfaux			25m (240m)	5m (10m)	0 (0)
wfconv			100k (100k)	100k (100k)	0 (0)

TABLE 15: IDCX ACCOUNT TABLE GROWTH (CONTINUED)

Table Name	New Rows per Month in 1,000s	Rows per Block	3/15/99 Operational (Archival)		
			Initial Extent	Next Extent	Percent Increase
wfdisc		28	110m (1200m)	10m (200m)	0 (0)
wftag			31m (10m)	500k (2m)	0 (0)
xtag			10m	1m	0

1. **lastid_arcdb** only exists in the archival database (March 2001 information)

Table 16 provides information about the required indexes of the IDCX account.

TABLE 16: IDCX ACCOUNT INDEXES

Table Name	Indexed Columns	3/15/99 Index Name (unique?)	3/15/99 Operational (Archival) Extents	
			Initial	Next
alphasite	*sta, address*	asitex (u)	(100k)	(100k)
amp3c	*arid*	amp3cx	60m (110m)	10m (50m)
amplitude	*ampid*	ampidx (u) (amplampidx)	40m (4k)	10m (200m)
	arid	amplaridx	49m (100m)	1m (200m)
apma	*arid*	apmax	20m (40m)	5m (20m)

TABLE 16: IDCX ACCOUNT INDEXES (CONTINUED)

Table Name	Indexed Columns	3/15/99 Index Name (unique?)	3/15/99 Operational (Archival) Extents	
			Initial	Next
arrival	*arid*	aridx (u)	25m (75m)	5m (20m)
	stassid	arrstasssx	35m (85m)	5m (20m)
	time	arrtimex	40m (100m)	5m (20m)
assoc	*orid, arid*	assocx (u)	12m	1m
	arid	assaridx	11m	1m
dataready	*dataid*	dataidndx (u)	6.5m (10m)	200k (2m)
	tagid	tagidndx	11m (20m)	1m (5m)
datauser	*userid*	sys_c00234089 (u)	12k	100k
detection	*arid*	detaridx (u)	25m (50m)	5m (20m)
	lddate	detlddatex	25m (70m)	5m (20m)
	time	dettimex	40m (95m)	5m (20m)
dlfile	*dfid*	dfdfidx (u)	1m (1m)	100k (100k)
	sta, chan	dstax	1m (1m)	100k (100k)
dlman	*dlid*	dlmanx (u)	100k (100k)	100k (100k)

TABLE 16: IDCX ACCOUNT INDEXES (CONTINUED)

Table Name	Indexed Columns	3/15/99 Index Name (unique?)	3/15/99 Operational (Archival) Extents	
			Initial	Next
evchar_prod	*prodid, orid*	evchar_prodx (u)	1m (1m)	2m (2m)
ftpfailed	*msgid*	msgidftpx	2m (100k)	1m (100k)
fwfile	*ndc, sta*	fwfilex (u)	200k (200k)	200k (200k)
fwgap	*fwgid*	fwgapx (u)	100k (100k)	100k (100k)
fwsite	*ndc, priority*	fwsitex (u)	200k (200k)	200k (200k)
hydro_features	*arid*	hydroaridx	5m (1m)	1m (1m)
infra_features	*arid*	infraaridx (ainfraaridx)	12k (100k)	228k (100k)
interval	*class, name, endtime*	intcomplexx	23m (500m)	2m (50m)
	endtime	intendtimex	9m (300m)	2m (20m)
	intvlid			
	moddate	intmoddatex	25m (300m)	2m (20m)
lastid	*keyname*	lastidx (u)	8k	100k
lastid_arcdb[1]	*keyname*	lastidx2 (u)	8k	100k
msgaux	*msgid*	msgauxidex	4m (20m)	100k (10m)

TABLE 16: IDCX ACCOUNT INDEXES (CONTINUED)

Table Name	Indexed Columns	3/15/99 Index Name (unique?)	3/15/99 Operational (Archival) Extents	
			Initial	Next
msgdatatype	*msgid*	msgidtypx	50m (10m)	100k (1m)
msgdest	*msgdid*	msgddidnx (u)	50m (20m)	10m (5m)
	msgid	msgdidnx	50m (20m)	10m (5m)
	status	msgdstatnx	50m (20m)	10m (5m)
msgdisc	*msgid*	msgidnx (u)	100m (20m)	10m (5m)
	idate	msgidatenx	100m (20m)	10m (5m)
	intid	intidnx	100m (20m)	10m (5m)
	status	msgstatnx	100m (20m)	10m (5m)
origerr	*orid*	oerrx (u)	3m	100k
origin	*orid*	oridx (u)	2m	100k
	time	otimex	4m	100k
outage	*otgid*			
	sta, chan, time			
	time			
productcriteria	*prodid*	prodidndx (u)	100k	100k
producttypeevpars	*prodid*	producttypeevparsx	1m	1m
remark	*commid, lineno*	remarkx (u)	100k	100k

TABLE 16: IDCX ACCOUNT INDEXES (CONTINUED)

Table Name	Indexed Columns	3/15/99 Index Name (unique?)	3/15/99 Operational (Archival) Extents	
			Initial	Next
request	*reqid*	reqidx (u)	10m (40m)	2m (2m)
	end_time	request02endx	20m (43m)	5m (10m)
	modtime	request02modx	50m (38m)	10m (10m)
stassoc	*stassid*	stassidx	2m (5m)	1m (1m)
	time	stasstimex	5m (9m)	1m (1m)
subsuser	*userid*	useridndx (u)	100k (100k)	100k (100k)
wfaux	*wfid*	wfauxx (u)	25m (350m)	5m (50m)
wfconv	*sta, chan*	wfconvx (u)	100k (100k)	100k (100k)
wfdisc	*wfid*	wfidxx (u) (wfdisc_idndx (u))	40m (100m)	5m (50m)
	dir, dfile	wdfilex (wfdisc_filendx)	70m (200m)	10m (100m)
	sta, time	wfstax	40m	10m
	time	wftimex (wfdisc_timendx)	50m (100m)	5m (50m)
wftag	*tagid*			
	wfid	wftagwfidx	(5m)	(500k)

1. **lastid_arcdb** exists only in the archival database (March 2001 information)

Table 17 lists the synonyms of the IDCX account.

TABLE 17: IDCX ACCOUNT SYNONYMS

Synonym Name	Account	Table	Description
affiliation	STATIC	**affiliation**	continuous data import, station processing, *Message Subsystem*, *Subscription Subsystem*, *DACS*
instrument	STATIC	**instrument**	continuous data import, station processing, *Message Subsystem*, *Subscription Subsystem*
network	STATIC	**network**	system monitoring
participation	STATIC	**participation**	system monitoring
sensor	STATIC	**sensor**	continuous data import, station processing, *Message Subsystem*, *Subscription Subsystem*
site	STATIC	**site**	continuous data import, station processing, *Message Subsystem*, *Subscription Subsystem*
siteaux	STATIC	**siteaux**	continuous data import, station processing, *Message Subsystem*, *Subscription Subsystem*
sitechan	STATIC	**sitechan**	continuous data import, station processing, *Message Subsystem*, *Subscription Subsystem*
sitepoll[1]	STATIC	**sitepoll**	system monitoring
stanet[1]	STATIC	**stanet**	continuous data import

1. did not exist in the archival IDCX account at the PIDC on 15 March 1999

The required views of the IDCX account are described in Table 18.

TABLE 18: IDCX ACCOUNT VIEWS

View Name	Tables	Description
problastid	**lastid**	restricts the update privilege for **lastid**
wfproto	**instrument**, **sensor**, **wfconv**	creates a template of **wfdisc** entries for use by *DLMan*

Table 19 provides information about triggers in the IDCX account. The **wfdisc_endtime** trigger maintains entries in the **timestamp** table. In particular the maximum endtime of the **wfdisc** table is stored under the DLTRIGGER *procclass*, and is used by the *Distributed Application Control System (DACS)* when querying the database to establish whether or not new data have arrived and need to be processed. The dataready_to_prodtrack and fileproduct_to_dataready triggers are used by the *Subscription Subsystem*.

TABLE 19: IDCX ACCOUNT TRIGGERS

Trigger Name	Table	Type	Event	Tables for Select	Tables for Update
dataready_to_ prodtrack	**dataready**	before	insert	**productcriteria, producttypeorigin, producttypesta,** SEL1.**origin,** SEL1.**origerr,** SEL1.**asoc**	**prodtrack**
fileproduct_to_ dataready	**fileproduct**	after	insert	**lastid**	**dataready**
wfdisc_endtime	**wfdisc**	after	insert, update	**wfdisc**, **stanet**	**timestamp**

As shown in Table 20, no sequences are required in the IDCX account.

TABLE 20: IDCX ACCOUNT SEQUENCES

Sequence Name
none

LEB ACCOUNT

The LEB account contains the results of the analyst review of the SEL3. At any given time, up to about 10 days' worth of data can be in the process of being reviewed by the analysis staff. Thus, the results contained in the LEB account are often transitory and are modified numerous times.

Applications that connect to the LEB account derive the connect string by referring to the symbolic name `LEBDB`.

Table 21 lists the LEB account tables by function.

TABLE 21: LEB ACCOUNT BY FUNCTION

Function	Tables and Views	Description
LEB data	**allocate_hour** **amp3c** **amplitude** **apma** **arrival** **assoc** **detection** **discard** **event** **fkdisc** **hydro_features** **infra_features** **netmag** **origerr** **origin** **parrival** **remark** **stamag**	applications: *Message Subsystem*, *Subscription Subsystem*, interactive analysis (*ARS*, *XfkDisplay*, *SpectraPlot*, *PolariPlot*, *EvLoc*, *DFX*), scripts synonyms: **affiliation**, **ampdescript**, **beamaux**, **gregion**, **instrument**, **sensor**, **site**, **siteaux**, **sitechan**, **sregion**, **wftag**, **wfdisc**
interactive analysis	**event_control** **in_event_control**	applications: interactive analysis (*ARS*, *EvLoc*) other tables: LEB data tables synonyms: **affiliation**, **ampdescript**, **gregion**, **instrument**, **in**_*tables*, **out**_*tables*, **sensor**, **site**, **siteaux**, **sitechan**, **sregion**
QC	**allow_resid**	applications: *AEQ*, *rebqc* other tables: LEB data tables synonyms: LEB data synonyms, **seisgrid**, **seisindex**, **dseisgrid**, **dseisindex**

Table 22 provides table privilege information for the LEB account.

TABLE 22: LEB ACCOUNT TABLE PRIVILEGES

	Operational (Archival) Privileges		
Table Name	**Insert**	**Update**	**Delete**
allocate_hour			
allow_resid			
amp3c			MIGRATE (MIGRATE)
amplitude			MIGRATE (MIGRATE)
apma			MIGRATE (MIGRATE)
arrival	IDCX (IDCX)	IDCX (IDCX)	IDCX, MIGRATE (IDCX, MIGRATE)
assoc	IDCX (IDCX)	IDCX (IDCX)	IDCX, MIGRATE (IDCX, MIGRATE)
detection			MIGRATE (MIGRATE)
discard			MIGRATE (MIGRATE)
event[1]			
event_control			
fkdisc[1]			
hydro_features			MIGRATE (MIGRATE)
infra_features			MIGRATE
in_event_control			
netmag			MIGRATE (MIGRATE)

TABLE 22: LEB ACCOUNT TABLE PRIVILEGES (CONTINUED)

	Operational (Archival) Privileges		
Table Name	**Insert**	**Update**	**Delete**
origerr			MIGRATE (MIGRATE)
origin	IDCX (IDCX)	IDCX (IDCX)	IDCX, MIGRATE (IDCX, MIGRATE)
parrival			MIGRATE (MIGRATE)
remark			MIGRATE (MIGRATE)
stamag			MIGRATE (MIGRATE)

1. did not exist in either LEB account at the PIDC on 15 March 1999

Table 23 provides table growth information for the LEB account.

TABLE 23: LEB ACCOUNT TABLE GROWTH

			3/15/99 Operational (Archival)		
Table Name	**New Rows per Month in 1,000s**	**Rows per Block**	**Initial Extent**	**Next Extent**	**Percent Increase**
allocate_hour			3m (2m)	100k (100k)	0 (0)
allow_resid			100k (2m)	100k (100k)	1 (1)
amp3c	< 1	64	1m (1m)	212k (272k)	0 (0)
amplitude	34	37	25m (145m)	1m (10m)	0 (0)

TABLE 23: LEB ACCOUNT TABLE GROWTH (CONTINUED)

Table Name	New Rows per Month in 1,000s	Rows per Block	3/15/99 Operational (Archival)		
			Initial Extent	Next Extent	Percent Increase
apma	< 1	23	1m (1m)	200k (200k)	0 (0)
arrival	34	24	14m (14m)	1m (1m)	0 (0)
assoc	34	35	10m (130m)	1m (10m)	0 (0)
detection	< 1	30	1m (820k)	200k (200k)	0 (0)
discard	3	72	1m (1m)	100k (100k)	0 (0)
event					
event_control	2	52	7m (6m)	1m (1m)	0 (0)
fkdisc					
hydro_features	7	20	2m (1m)	200k (200k)	0 (0)
infra_features			12k (100k)	100k (50m)	50 (0)
in_event_control			200k (200k)	200k (200k)	0 (0)
netmag	6	50	5m (16m)	100k (10m)	0 (0)
origerr	2	30	4m (4m)	100k (100k)	0 (0)
origin	2	26	4m (4m)	100k (100k)	0 (0)

TABLE 23: LEB ACCOUNT TABLE GROWTH (CONTINUED)

Table Name	New Rows per Month in 1,000s	Rows per Block	3/15/99 Operational (Archival)		
			Initial Extent	Next Extent	Percent Increase
parrival	10	55	8m (6m)	500k (500k)	0 (0)
remark	< 1	110	200k (200k)	100k (100k)	0 (0)
stamag	33	37	25m (146m)	1m (50m)	0 (0)

Table 24 describes the required indexes found in the LEB account.

TABLE 24: LEB ACCOUNT INDEXES

Table Name	Indexed Columns	3/15/99 Index Name (unique?)	3/15/99 Operational (Archival) Extents	
			Initial	Next
allocate_hour	*jdate, hour, action*	allochridx (u)	2m (2m)	100k (100k)
allow_resid	*phase, statype*	arx	100k (100k)	100k (100k)
amp3c	*arid*	amp3caridx	1m (1m)	1m (1m)
amplitude	*ampid*	ampidx (u)	5m (41m)	1m (1m)
	arid	amplaridx	6m (42m)	1m (1m)
	parid	ampparidx	5m (40m)	1m (1m)

TABLE 24: LEB ACCOUNT INDEXES (CONTINUED)

Table Name	Indexed Columns	3/15/99 Index Name (unique?)	3/15/99 Operational (Archival) Extents	
			Initial	Next
apma	*arid*	apmaaridx	1m (1m)	1m (1m)
arrival	*arid*	aridx (u)	3m (25m)	1m (1m)
	stassid	arrstassx	3m (27m)	1m (1m)
	time	arrtimex	3m (28m)	1m (1m)
assoc	*arid*	assaridx (u)	3m (36m)	1m (1m)
	orid, arid	assocx (u)	4m (37m)	1m (1m)
detection	*arid*	detectaridx (u)	1m (1m)	1m (1m)
	lddate			
	time	rdettimex	1m (1m)	1m (1m)
discard	*evid*	discardidx	1m (1m)	500k (500k)
event	*evid*			
event_control	*orid*	ev_ctl_oridx4	3m (3m)	1m (1m)
hydro_features	*arid*	hydoaridx	300k (300k)	100k (100k)
infra_features	*arid*	infraaridx	12k (100k)	100k (100k)

TABLE 24: LEB ACCOUNT INDEXES (CONTINUED)

Table Name	Indexed Columns	3/15/99 Index Name (unique?)	3/15/99 Operational (Archival) Extents	
			Initial	Next
netmag	*magid*	magidx (u)	2m (6m)	100k (100k)
	orid	nmoridx	1m (6m)	100k (100k)
origerr	*orid*	oerrx (u)	800k (800k)	100k (100k)
origin	*orid*	oridx (u)	700k (700k)	100k (100k)
	time	ortimex	960k (952k)	100k (100k)
parrival	*orid*	parroridx	3m (3m)	1m (1m)
	parid	parrparidx	2m (2m)	1m (1m)
remark	*commid, lineno*	remarkx (u)	100k (100k)	100k (100k)
stamag	*ampid*	smampid	6m (35m)	1m (1m)
	arid	smarid2x	6m (35m)	1m (1m)
	magid,sta	stamagid2x	10m (54m)	1m (1m)
	orid	smorid2x	6m (38m)	1m (1m)

Table 25 lists the synonyms of the LEB account.

TABLE 25: LEB ACCOUNT SYNONYMS

Synonym Name	Account	Table	Description
ampdescript[1]	IDCX	**ampdescript**	LEB data, interactive analysis
lastid[1]	IDCX	**lastid**	schema administration
na_value	IDCX	**na_value**	schema administration
wfdisc	IDCX	**wfdisc**	LEB data, interactive analysis, QC
out_amplitude	LEB	**amplitude**	interactive analysis
out_arrival	LEB	**arrival**	interactive analysis
out_assoc	LEB	**assoc**	interactive analysis
out_event_control	LEB	**event_control**	interactive analysis
out_hydro_features	LEB	**hydro_features**	interactive analysis
out_infra_features[2]	LEB	**infra_features**	interactive analysis
out_netmag	LEB	**netmag**	interactive analysis
out_origerr	LEB	**origerr**	interactive analysis
out_origin	LEB	**origin**	interactive analysis
out_parrival	LEB	**parrival**	interactive analysis
out_stamag	LEB	**stamag**	interactive analysis
in_assoc	SEL3	**assoc**	interactive analysis
in_netmag	SEL3	**netmag**	interactive analysis
in_origerr	SEL3	**origerr**	interactive analysis
in_origin	SEL3	**origin**	interactive analysis
in_parrival	SEL3	**parrival**	interactive analysis
in_stamag	SEL3	**stamag**	interactive analysis
wftag	SEL3	**wftag**	interactive analysis
affiliation	STATIC	**affiliation**	LEB data, interactive analysis, QC
beamaux	STATIC	**beamaux**	LEB data, QC

TABLE 25: LEB ACCOUNT SYNONYMS (CONTINUED)

Synonym Name	Account	Table	Description
dseisgrid	STATIC	**dseisgrid**	QC
dseisindex	STATIC	**dseisindex**	QC
gregion	STATIC	**gregion**	LEB data, QC
instrument	STATIC	**instrument**	LEB data, interactive analysis, QC
network	STATIC	**network**	system monitoring
participation	STATIC	**participation**	system monitoring
seisgrid	STATIC	**seisgrid**	QC
seisindex	STATIC	**seisindex**	QC
sensor	STATIC	**sensor**	LEB data, interactive analysis, QC
site	STATIC	**site**	LEB data, interactive analysis, QC
siteaux	STATIC	**siteaux**	LEB data, interactive analysis, QC
sitechan	STATIC	**sitechan**	LEB data, interactive analysis, QC
sregion	STATIC	**sregion**	LEB data, interactive analysis, QC

1. did not exist in the archival LEB account at the PIDC on 15 March 1999
2. did not exist in either LEB account at the PIDC on 15 March 1999

No views are required in the LEB account (Table 26).

TABLE 26: LEB ACCOUNT VIEWS

View Name
none

The triggers of the LEB account are listed in Table 27.

TABLE 27: LEB ACCOUNT TRIGGERS

Trigger Name	Table	Type	Event	Tables for Select	Tables for Update
allocate_bef_row_ins	**allocate_hour**	before	insert	**allocate_hour**	IDCX. **interval**

The LEB account has no sequences (Table 28).

TABLE 28: LEB ACCOUNT SEQUENCES

Sequence Name
none

MAP ACCOUNT

The MAP account exists purely as a repository of map tables required by the *Map* application program.

Applications that connect to the MAP account derive the connect string by referring to the symbolic name `MAPDB`.

As shown in Table 29, the MAP account consists of only one functional group.

TABLE 29: MAP ACCOUNT BY FUNCTION

Function	Table Name	Description
map	**colordisc** **mapcolor** **mapdisc** **mapover** **mappoint** **overlaydisc**	applications: *Map*

The tables of the MAP account have no external privileges granted (Table 30).

TABLE 30: MAP ACCOUNT TABLE PRIVILEGES

Table Name
none

Table 31 shows the growth of the tables in the MAP account.

TABLE 31: MAP ACCOUNT TABLE GROWTH

Table Name	New Rows per Month in 1,000s	Rows per Block	3/15/99 Operational (Archival)		
			Initial Extent	Next Extent	Percent Increase
colordisc			12k (10k)	12k (10k)	50 (50)
mapcolor			12k (10k)	12k (10k)	50 (50)
mapdisc			20k (20k)	12k (10k)	50 (50)
mapover			12k (10k)	12k (10k)	50 (50)
mappoint			20k (20k)	12k (10k)	50 (50)
overlaydisc			12k (10k)	12k (10k)	50 (50)

The MAP account contains no indexes, synonyms, views, triggers or sequences (Tables 32 – 36).

TABLE 32: MAP ACCOUNT INDEXES

Index Name
none

TABLE 33: MAP ACCOUNT SYNONYMS

Synonym Name
none

TABLE 34: MAP ACCOUNT VIEWS

View Name
none

TABLE 35: MAP ACCOUNT TRIGGERS

Trigger Name
none

TABLE 36: MAP ACCOUNT SEQUENCES

Sequence Name
none

MIGRATE ACCOUNT

The MIGRATE account contains the tables needed to migrate database tables from accounts of the operational database to the archival database and to purge old information from the operational database. MIGRATE exists only on the operational database. Migration and purging are performed for groups of tables belonging to a common account. For each group, "rules" are stored in the MIGRATE account in a separate table for each group. The **mig_rules** table is a template that is used to generate these "rules" tables. The tables for migration are named **date**_*acct*_**rules**, and rules for purging are placed in tables named **purg**_*acct*_**rules**, where *acct* is the name of the account. For example, **date_sel1_rules** and **purg_sel1_rules** contain the rules for the SEL1 account.

The MIGRATE account has one functional group (Table 37).

TABLE 37: MIGRATE ACCOUNT BY FUNCTION

Function	Table Name	Description
migration	**interval** **mig_date** **mig_rules**	applications: *MigrateData* synonyms: **lastid** (migration and purge rules tables are generated as needed from **mig_rules**, which is a template table)

Table 38 lists the privileges of the MIGRATE account.

TABLE 38: MIGRATE ACCOUNT TABLE PRIVILEGES

	Operational (Archival) Privileges		
Table Name	**Insert**	**Update**	**Delete**
interval	IDCX	IDCX	IDCX
mig_date			
mig_rules[1]			

1. did not exist in the operational MIGRATE account at the PIDC on 15 March 1999

Table 39 shows the growth of the tables in the MIGRATE account.

TABLE 39: MIGRATE ACCOUNT TABLE GROWTH

Table Name	New Rows per Month in 1,000s	Rows per Block	3/15/99 Operational (Archival)		
			Initial Extent	Next Extent	Percent Increase
interval			15m	1m	0
mig_date			100k	100k	0
mig_rules					

Table 40 shows the required indexes found in the MIGRATE account.

TABLE 40: MIGRATE ACCOUNT INDEXES

Table Name	Indexed Columns	3/15/99 Index Name (unique?)	3/15/99 Operational (Archival) Extents	
			Initial	Next
interval	*class, name, endtime*			
	endtime	inttimex	1m	5m
	moddate			

Table 41 lists the synonyms of the MIGRATE account.

TABLE 41: MIGRATE ACCOUNT SYNONYMS

Synonym Name	Account	Table	Description
lastid	IDCX	**lastid**	migration

The MIGRATE account contains no views, triggers, or sequences (Tables 42 – 44).

TABLE 42: MIGRATE ACCOUNT VIEWS

View Name
none

TABLE 43: MIGRATE ACCOUNT TRIGGERS

Trigger Name
none

TABLE 44: MIGRATE ACCOUNT SEQUENCES

Sequence Name
none

REB ACCOUNT

The REB account is the repository of the data forming the REB. Applications that connect to the REB account derive the connect string by referring to the symbolic name REBDB. Table 45 shows the REB account by functions.

TABLE 45: REB ACCOUNT BY FUNCTION

Function	Tables and Views	Description
REB data	**amp3c** **amplitude** **apma** **arrival** **assoc** **detection** **discard** **event** **event_control** **hydro_features** **infra_features** **netmag** **origerr** **origin** **parrival** **remark** **stamag**	applications: *Message Subsystem*, *Subscription Subsystem*, interactive analysis (*ARS*, *XfkDisplay*, *SpectraPlot*, *PolariPlot*, *EvLoc*, *DFX*), scripts synonyms: **affiliation**, **ampdescript**, **beamaux**, **gregion**, **instrument**, **sensor**, **site**, **siteaux**, **sitechan**, **sregion**, **wftag**, **wfdisc**
post-analysis processing	**ceppks** **complexity** **splp** **spvar** **thirdmom** **timefreq**	applications: *GSEBull*, *AutoDRM, DFX* other tables: REB data tables synonyms: REB data synonyms

The external privileges granted for the tables of the REB account are shown in Table 46.

TABLE 46: REB ACCOUNT TABLE PRIVILEGES

	Operational (Archival) Privileges		
Table Name	**Insert**	**Update**	**Delete**
amp3c	LEB (LEB)	LEB (LEB)	LEB (LEB)
amplitude	LEB (LEB)	LEB (LEB)	LEB (LEB)
apma	LEB (LEB)	LEB (LEB)	LEB (LEB)
arrival	LEB	LEB	LEB
assoc	LEB	LEB	LEB
ceppks			
complexity			
detection	LEB (LEB)	LEB (LEB)	LEB (LEB)
discard	LEB	LEB	LEB
event[1]			
event_control			
hydro_features	LEB (LEB)	LEB (LEB)	LEB (LEB)
infra_features			
netmag	LEB (LEB)	LEB (LEB)	LEB (LEB)
origerr	LEB	LEB	LEB
origin	LEB	LEB	LEB

TABLE 46: REB ACCOUNT TABLE PRIVILEGES (CONTINUED)

	Operational (Archival) Privileges		
Table Name	**Insert**	**Update**	**Delete**
parrival	LEB (LEB)	LEB (LEB)	LEB (LEB)
remark	LEB	LEB	LEB
splp			
spvar			
stamag	LEB (LEB)	LEB (LEB)	LEB (LEB)
thirdmom[2]			
timefreq			

1. did not exist in either REB account at the PIDC on 15 March 1999
2. did not exist in the archival REB count at the PIDC on 15 March 1999

Table 47 provides table growth information for the REB account.

TABLE 47: REB ACCOUNT TABLE GROWTH

			3/15/99 Operational (Archival)		
Table Name	**New Rows per Month in 1,000s**	**Rows per Block**	**Initial Extent**	**Next Extent**	**Percent Increase**
amp3c			1m (400k)	200k (266k)	0 (1)
amplitude			258m (255m)	10m (14m)	0 (1)
apma			1m (400k)	200k (266k)	0 (1)
arrival			170m (70m)	10m (5m)	0 (0)

TABLE 47: REB ACCOUNT TABLE GROWTH (CONTINUED)

Table Name	New Rows per Month in 1,000s	Rows per Block	3/15/99 Operational (Archival)		
			Initial Extent	Next Extent	Percent Increase
assoc			130m (55m)	10m (5m)	0 (0)
ceppks			10m (10m)	2m (2m)	0 (0)
complexity			12m (12m)	2m (2m)	0 (0)
detection			800k (200k)	200k (250k)	0 (1)
discard			5m (1m)	100k (100k)	0 (0)
event					
event_control			12k (2m)	228k (1m)	50 (0)
hydro_features			1m (400k)	200k (274k)	0 (1)
infra_features			12k (100k)	100k (50m)	50 (0)
netmag			17m (6m)	1m (2m)	0 (0)
origerr			11m (6m)	1m (2m)	0 (0)
origin			13m (6m)	1m (2m)	0 (0)
parrival			200m (200m)	20m (20m)	0 (1)

TABLE 47: REB ACCOUNT TABLE GROWTH (CONTINUED)

Table Name	New Rows per Month in 1,000s	Rows per Block	3/15/99 Operational (Archival)		
			Initial Extent	Next Extent	Percent Increase
remark			600k (300k)	100k (100k)	0 (0)
splp			1m (1m)	1m (1m)	0 (0)
spvar			10m (10m)	2m (2m)	0 (0)
stamag			200m (200m)	20m (20m)	0 (1)
thirdmom			5m	1m	50
timefreq			5m (5m)	1m (1m)	0 (1)

Table 48 lists the indexes of the REB account.

TABLE 48: REB ACCOUNT INDEXES

Table Name	Indexed Columns	3/15/99 Index Name (unique?)	3/15/99 Operational (Archival) Extents	
			Initial	Next
amp3c	*arid*	ramp3cx	1m (1m)	1m (1m)
amplitude	*ampid*	ampidx (u)	50m (50m)	10m (10m)
	arid	amplaridx	80m (36m)	10m (10m)
	parid	ampparidx	70m (36m)	10m (10m)

TABLE 48: REB ACCOUNT INDEXES (CONTINUED)

Table Name	Indexed Columns	3/15/99 Index Name (unique?)	3/15/99 Operational (Archival) Extents	
			Initial	Next
apma	*arid*	rapmacx	1m (1m)	1m (1m)
arrival	*arid*	aridx (u)	25m (14m)	5m (2m)
	stassid	arrstassx	25m (12m)	5m (2m)
	time	arrtimex	30m (15m)	5m (2m)
assoc	*arid*	assaridx (u)	25m (12m)	5m (2m)
	orid, arid	assocx (u)	30m (15m)	5m (2m)
detection	*arid*	rdetaridx	1m (1m)	1m (1m)
	lddate			
	time	rdettimex	1m (1m)	1m (1m)
discard	*evid*	discardidx	2m (1m)	500k (520k)
event	*evid*			
event_control	*orid*			
hydro_features	*arid*	hydoaridx	300k (100k)	100k (100k)
infra_features	*arid*	infraaridx	12k (100k)	100k (100k)

TABLE 48: REB ACCOUNT INDEXES (CONTINUED)

Table Name	Indexed Columns	3/15/99 Index Name (unique?)	3/15/99 Operational (Archival) Extents	
			Initial	Next
netmag	*magid*	magidx (u)	4m (3m)	1m (1m)
	orid	nmoridx	5m (3m)	1m (1m)
origerr	*orid*	oerrx (u)	2m (1.3m)	1m (500k)
origin	*orid*	oridx (u)	2m (1.3m)	1m (500k)
	time	ortimex	3m (2m)	1m (1m)
parrival	*parid*	paridxx (pararidxx)	14m (12m)	1m (1m)
	orid	parroridx	23m (21m)	1m (1m)
remark	*commid, lineno*	remarkx (u)	300k (200k)	100k (100k)
splp	*orid*	splp1	100k (100k)	100k (100k)
stamag	*arid*	sm2aridx	38m (19m)	1m (1m)
	magid, sta	sm2magidx	47m (24m)	1m (1m)
	orid	sm2moridx	36m (18m)	1m (1m)
	ampid	smampidx	42m (42m)	1m (1m)

Table 49 lists the synonyms of the REB account.

TABLE 49: REB ACCOUNT SYNONYMS

Synonym Name	Account	Table	Description
ampdescript[1]	IDCX	**ampdescript**	REB data, post-analysis processing
lastid[2]	IDCX	**lastid**	schema administration
na_value[1]	IDCX	**na_value**	schema administration
wfdisc	IDCX	**wfdisc**	REB data, post-analysis processing
wftag[1]	SEL3	**wftag**	REB data, post-analysis processing
affiliation	STATIC	**affiliation**	REB data, post-analysis processing
beamaux	STATIC	**beamaux**	REB data, post-analysis processing
dseisgrid[1]	STATIC	**dseisgrid**	QC
dseisindex[1]	STATIC	**dseisindex**	QC
gregion	STATIC	**gregion**	REB data, post-analysis processing
instrument	STATIC	**instrument**	REB data, post-analysis processing
network	STATIC	**network**	system monitoring
participation	STATIC	**participation**	system monitoring
seisgrid[1]	STATIC	**seisgrid**	QC
seisindex[1]	STATIC	**seisindex**	QC
sensor	STATIC	**sensor**	REB data, post-analysis processing
site	STATIC	**site**	REB data, post-analysis processing
siteaux	STATIC	**siteaux**	REB data, post-analysis processing
sitechan	STATIC	**sitechan**	REB data, post-analysis processing
sregion	STATIC	**sregion**	REB data, post-analysis processing

1. did not exist in either REB account at the PIDC on 15 March 1999
2. did not exist in the archival REB account at the PIDC on 15 March 1999

The REB account does not require views, triggers or sequences (Tables 50 – 52).

TABLE 50: REB ACCOUNT VIEWS

View Name
none

TABLE 51: REB ACCOUNT TRIGGERS

Trigger Name
none

TABLE 52: REB ACCOUNT SEQUENCES

Sequence Name
none

SEGMENT ACCOUNT

The SEGMENT account is the repository of pointers to segmented waveforms created from the events listed in the REB.

The SEGMENT account has one functional group (Table 53).

TABLE 53: SEGMENT ACCOUNT BY FUNCTION

Function	Table Name	Description
segment waveforms	**interval** **lastid** **wfdisc** **wftag**	applications: *DFX, Segment Archive, Message Subsystem*, *Subscription Subsystem* synonyms: **affiliation**, **arrival**, **assoc**, **instrument**, **origerr**, **origin**, **sensor**, **site**, **siteaux**, **sitechan**, **stanet**

The external privileges granted for the tables of the SEGMENT account are shown in Table 54.

TABLE 54: SEGMENT ACCOUNT TABLE PRIVILEGES

	Operational (Archival) Privileges		
Table Name	**Insert**	**Update**	**Delete**
interval			
lastid			
wfdisc		MIGRATE	MIGRATE
wftag			

Table 55 gives information on the table growth of the SEGMENT account.

TABLE 55: SEGMENT ACCOUNT TABLE GROWTH

			3/15/99 Operational (Archival)		
Table Name	**New Rows per Month in 1,000s**	**Rows per Block**	**Initial Extent**	**Next Extent**	**Percent Increase**
interval			100k (100k)	100k (100k)	0 (0)
lastid			12k (100k)	100k (100k)	50 (0)
wfdisc			200m (668m)	100m (100m)	0 (0)
wftag			200m (240m)	50m (50m)	0 (0)

Table 56 lists the indexes of the SEGMENT account.

TABLE 56: SEGMENT ACCOUNT INDEXES

Table Name	Indexed Columns	3/15/99 Index Name (unique?)	3/15/99 Operational (Archival) Extents	
			Initial	Next
interval	*class, name, endtime*	intcomplexx	100k (100k)	100k (100k)
	endtime	intendtimex	100k (100k)	100k (100k)
	moddate	intmoddatex	100k (100k)	100k (100k)
lastid	*keyname*	lastidx (u)	(100k)	(100k)
wfdisc	*dir, dfile*	wdfilex	200m (298m)	50m (50m)
	sta, time			
	time	wdtimex	69m (69m)	10m (10m)
	wfid	wfidx	57m (57m)	10m (10m)
wftag	*tagid*			
	wfid	wftagwfidx	84m (84m)	10m (10m)

Table 57 lists the synonyms of the SEGMENT account.

TABLE 57: SEGMENT ACCOUNT SYNONYMS

Synonym Name	Account	Table	Description
arrival	REB	**arrival**	segment waveforms
assoc	REB	**assoc**	segment waveforms
origerr	REB	**origerr**	segment waveforms
origin	REB	**origin**	segment waveforms
affiliation	STATIC	**affiliation**	segment waveforms
instrument[1]	STATIC	**instrument**	segment waveforms
network[1]	STATIC	**network**	segment waveforms
participation[1]	STATIC	**participation**	segment waveforms
sensor[1]	STATIC	**sensor**	segment waveforms
site	STATIC	**site**	segment waveforms
siteaux[1]	STATIC	**siteaux**	segment waveforms
sitechan[1]	STATIC	**sitechan**	segment waveforms
stanet[1]	STATIC	**stanet**	segment waveforms

1. did not exist in either SEGMENT account at the PIDC on 15 March 1999

The SEGMENT account contains no views, triggers, or sequences (Tables 58 – 60).

TABLE 58: SEGMENT ACCOUNT VIEWS

View Name
none

TABLE 59: SEGMENT ACCOUNT TRIGGERS

Trigger Name
none

TABLE 60: SEGMENT ACCOUNT SEQUENCES

Sequence Name
none

SEL1 ACCOUNT

The SEL1 account is the repository of the data forming the SEL1. Events are automatically built (if they have origin times approximately two hours prior to real time) from detections made on the waveforms of the primary seismic and hydroacoustic networks. Applications that connect to the SEL1 account derive the connect string by referring to the symbolic name `SEL1DB`. Table 61 describes the SEL1 account by function.

TABLE 61: SEL1 ACCOUNT BY FUNCTION

Function	Tables And Views	Description
SEL1 data	**assoc** **netmag** **origerr** **origin** **parrival** **remark** **stamag**	applications: *Message Subsystem*, *Subscription Subsystem*, interactive analysis synonyms: **affiliation**, **ampdescript**, **amplitude**, **arrival**, **beamaux**, **gregion**, **instrument**, **interval**, **sensor**, **site**, **siteaux**, **sitechan**, **sregion**
network processing	**assoc_temp_ga** **event** **ga_tag** **origerr_temp_ga** **origin_temp_ga** **wftag**	applications: *GA*, *DFX* other tables: SEL1 data tables synonyms: **affiliation**, **assoc_stapro**, **ampdescript**, **amplitude**, **arrival**, **instrument**, **interval**, **origerr_stapro**, **origin_stapro**, **sensor**, **site**, **siteaux**, **sitechan**, **stassoc**, **wfdisc**

The external privileges granted for the tables of the SEL1 account are shown in Table 62.

TABLE 62: SEL1 ACCOUNT TABLE PRIVILEGES

	Operational (Archival) Privileges		
Table Name	**Insert**	**Update**	**Delete**
assoc			MIGRATE
assoc_temp_ga[1]			
event			MIGRATE
ga_tag[1]	SEL2, SEL3	SEL2, SEL3	MIGRATE, SEL2, SEL3
netmag			MIGRATE
origerr			MIGRATE
origerr_temp_ga[1]			
origin			MIGRATE

TABLE 62: SEL1 ACCOUNT TABLE PRIVILEGES (CONTINUED)

	Operational (Archival) Privileges		
Table Name	**Insert**	**Update**	**Delete**
origin_temp_ga[1]			
parrival[2]			
remark			
stamag	(MIGRATE)	(MIGRATE)	MIGRATE (MIGRATE)
wftag			MIGRATE

1. GA tables exist only on the operational SEL1 account
2. did not exist in either SEL1 account at the PIDC on 15 March 1999

Table 63 gives information on the table growth of the SEL1 account.

TABLE 63: SEL1 ACCOUNT TABLE GROWTH

			3/15/99 Operational (Archival)		
Table Name	**New Rows per Month in 1,000s**	**Rows per Block**	**Initial Extent**	**Next Extent**	**Percent Increase**
assoc	33	35	12m (120m)	500k (5m)	0 (0)
assoc_temp_ga			100k	100k	0
event	4	83	4m (9m)	100k (1m)	0 (0)
ga_tag			50m	10m	0
netmag	6	50	9m (24m)	500k (2m)	0 (0)
origerr	4	30	8m (22m)	100k (2m)	0 (0)
origerr_temp_ga			100k	100k	0

TABLE 63: SEL1 ACCOUNT TABLE GROWTH(CONTINUED)

Table Name	New Rows per Month in 1,000s	Rows per Block	3/15/99 Operational (Archival)		
			Initial Extent	Next Extent	Percent Increase
origin	4	26	10m (27m)	100k (2m)	0 (0)
origin_temp_ga			100k	100k	0
parrival					
remark			100k (100k)	100k (100k)	0 (0)
stamag	18	37	7m (159m)	200k (100m)	0 (0)
wftag			5m (40m)	500k (500k)	0 (0)

Table 64 lists the indexes of the SEL1 account.

TABLE 64: SEL1 ACCOUNT INDEXES

Table Name	Indexed Columns	3/15/99 Index Name (unique?)	3/15/99 Operational (Archival) Extents	
			Initial	Next
assoc	*orid, arid*	assocx (u)	4m	100k
	arid	assaridx	4m	100k
assoc_temp_ga	*arid, orid*	assoc_temp_gax1 (u)	100k	100k
	orid	assoc_temp_gax2	100k	100k
event	*evid*	eventx (u)	1m (3m)	100k (500k)
ga_tag	*id, state*	gax_tagx	80m	5m

TABLE 64: SEL1 ACCOUNT INDEXES (CONTINUED)

Table Name	Indexed Columns	3/15/99 Index Name (unique?)	3/15/99 Operational (Archival) Extents	
			Initial	Next
netmag	*magid*	nmmagidx (u)	2m (6m)	200k (500k)
	orid	nmoridx	2m (6m)	200k (500k)
origerr	*orid*	orerrx (u)	1m (4m)	100k (500k)
origerr_temp_ga	*orid*	origerr_temp_gax1 (u)	100k	100k
origin	*orid*	oridx (u)	1m (3m)	100k (500k)
	time	otimex	1m (5m)	100k (500k)
origin_temp_ga	*orid*	origin_temp_gax1 (u)	100k	100k
	time	origin_temp_gax2	100k	100k
parrival	*parid*			
	orid			
remark	*commid, lineno*			

TABLE 64: SEL1 ACCOUNT INDEXES (CONTINUED)

Table Name	Indexed Columns	3/15/99 Index Name (unique?)	3/15/99 Operational (Archival) Extents	
			Initial	Next
stamag	*arid*	smarid2x (stmaridx)	2m (1m)	100k (1m)
	magid, sta	stamag2x (stmmagidx)	2m (1m)	100k (1m)
	orid	smorid2x (stmoridx)	2m (1m)	100k (1m)
wftag	*tagid*	wftidx (wftidx)	1m (15m)	500k (1m)
	wfid	wftwfidx (wfidx)	2m (15m)	500k (500k)

Table 65 lists the synonyms of the SEL1 account.

TABLE 65: SEL1 ACCOUNT SYNONYMS

Synonym Name	Account	Table	Description
amp3c	IDCX	**amp3c**	convenience (station processing)
ampdescript	IDCX	**ampdescript**	SEL1 data, network processing
amplitude	IDCX	**amplitude**	SEL1 data, network processing
apma	IDCX	**apma**	convenience (station processing)
arrival	IDCX	**arrival**	SEL1 data, network processing
assoc_stapro[1]	IDCX	**assoc**	network processing
detection	IDCX	**detection**	convenience (station processing)
hydro_features[2]	IDCX	**hydro_features**	convenience (station processing)
infra_features[2]	IDCX	**infra_features**	convenience (station processing)
interval	IDCX	**interval**	SEL1 data, network processing

TABLE 65: SEL1 ACCOUNT SYNONYMS (CONTINUED)

Synonym Name	Account	Table	Description
lastid[1]	IDCX	**lastid**	schema administration
na_value	IDCX	**na_value**	schema administration
origerr_stapro[1]	IDCX	**origerr**	network processing
origin_stapro[1]	IDCX	**origin**	network processing
request[1]	IDCX	**request**	*Retrieve Subsystem* (*DACS*)
stassoc	IDCX	**stassoc**	network processing
wfdisc	IDCX	**wfdisc**	network processing
affiliation[1]	STATIC	**affiliation**	SEL1 data, network processing
beamaux[2]	STATIC	**beamaux**	SEL1 data
gregion[1]	STATIC	**gregion**	SEL1 data
instrument[1]	STATIC	**instrument**	SEL1 data, network processing
network[1]	STATIC	**network**	system monitoring
participation[1]	STATIC	**participation**	system monitoring
sensor[1]	STATIC	**sensor**	SEL1 data, network processing
site[1]	STATIC	**site**	SEL1 data, network processing
siteaux[1]	STATIC	**siteaux**	SEL1 data, network processing
sitechan[1]	STATIC	**sitechan**	SEL1 data, network processing
sregion[1]	STATIC	**sregion**	SEL1 data

1. did not exist in the archival SEL1 account at the PIDC on 15 March 1999
2. did not exist in either SEL1 account at the PIDC on 15 March 1999

The SEL1 account does not require views, triggers, or sequences (Tables 66 – 68).

TABLE 66: SEL1 ACCOUNT VIEWS

View Name
none

TABLE 67: SEL1 ACCOUNT TRIGGERS

Trigger Name
none

TABLE 68: SEL1 ACCOUNT SEQUENCES

Sequence Name
none

SEL2 ACCOUNT

The SEL2 account is the repository of the data forming the SEL2. Events are automatically built (if they have origin times approximately six hours prior to real time) from detections made on the waveforms of the S/H/I networks. Applications that connect to the SEL2 account derive the connect string by referring to the symbolic name SEL2DB. Table 69 describes the SEL2 account by function.

TABLE 69: SEL2 ACCOUNT BY FUNCTION

Function	Tables and Views	Description
SEL2 data	**assoc** **netmag** **origerr** **origin** **parrival** **remark** **stamag**	applications: *Message Subsystem*, *Subscription Subsystem*, interactive analysis synonyms: **affiliation, ampdescript, amplitude, arrival, beamaux, gregion, instrument, interval, sensor, site, siteaux, sitechan, sregion**
network processing	**assoc_temp_ga** **event** **origerr_temp_ga** **origin_temp_ga** **wftag**	applications: *GA*, *DFX* other tables: SEL2 data tables synonyms: **affiliation, assoc_stapro, ampdescript, amplitude, arrival, ga_tag, instrument, interval, origerr_stapro, origin_stapro, sensor, site, siteaux, sitechan, stassoc, wfdisc**

Table 70 provides table privilege information for the SEL2 account.

TABLE 70: SEL2 ACCOUNT TABLE PRIVILEGES

	Operational (Archival) Privileges		
Table Name	**Insert**	**Update**	**Delete**
assoc			MIGRATE
assoc_temp_ga[1]			
event			MIGRATE
netmag			MIGRATE
origerr			MIGRATE
origerr_temp_ga[1]			
origin			MIGRATE
origin_temp_ga[1]			
parrival[2]			

TABLE 70: SEL2 ACCOUNT TABLE PRIVILEGES (CONTINUED)

	Operational (Archival) Privileges		
Table Name	**Insert**	**Update**	**Delete**
remark			
stamag	(MIGRATE)	(MIGRATE)	MIGRATE (MIGRATE)
wftag	(IDCX, SEL1)		MIGRATE (IDCX, SEL1)

1. *GA* tables exist only on the operational SEL2 account
2. did not exist in either SEL2 account at the PIDC on 15 March 1999

Table 71 provides growth information for tables of the SEL2 account.

TABLE 71: SEL2 ACCOUNT TABLE GROWTH

			3/15/99 Operational (Archival)		
Table Name	**New Rows per Month in 1,000s**	**Rows per Block**	**Initial Extent**	**Next Extent**	**Percent Increase**
assoc	33	35	15m (140m)	1m (5m)	0 (0)
assoc_temp_ga			100k	100k	0
event	4	83	5m (10m)	100k (1m)	0 (0)
netmag	6	50	10m (27m)	500k (2m)	0 (0)
origerr	4	30	7m (23m)	200k (2m)	0 (0)
origerr_temp_ga			100k	100k	0
origin	4	26	9m (29m)	100k (2m)	0 (0)

TABLE 71: SEL2 ACCOUNT TABLE GROWTH (CONTINUED)

Table Name	New Rows per Month in 1,000s	Rows per Block	3/15/99 Operational (Archival)		
			Initial Extent	Next Extent	Percent Increase
origin_temp_ga			100k	100k	0
parrival					
remark			100k (100k)	100k (100k)	0 (0)
stamag	18	37	7m (100m)	200k (5m)	0 (0)
wftag			3m (3m)	200k (200k)	0 (0)

Table 72 lists the indexes of the SEL2 account.

TABLE 72: SEL2 ACCOUNT INDEXES

Table Name	Indexed Columns	3/15/99 Index Name (unique?)	3/15/99 Operational (Archival) Extents	
			Initial	Next
assoc	*orid, arid*	assocx (u)	4m (35m)	1m (2m)
	arid	assaridx	4m (33m)	1m (3m)
assoc_temp_ga	*arid, orid*			
	orid			
event	*evid*	eventx (u)	3m (4m)	100k (62k)

TABLE 72: SEL2 ACCOUNT INDEXES (CONTINUED)

Table Name	Indexed Columns	3/15/99 Index Name (unique?)	3/15/99 Operational (Archival) Extents	
			Initial	Next
netmag	*magid*	nmmagidx (u)	2m (7m)	100k (1m)
	orid	nmoridx	2m (7m)	100k (1m)
origerr	*orid*	orerrx (u)	1m (3m)	100k (500k)
origerr_temp_ga	*orid*			
origin	*orid*	oridx (u)	1m (3m)	100k (500k)
	time	otimex	1m (5m)	100k (500k)
origin_temp_ga	*orid*			
	time			
parrival	*parid*			
	orid			
remark	*commid, lineno*	remarkx (u)	8k (4k)	100k (100k)
stamag	*arid*	smarid2x (stmaridx)	1m (1m)	100k (1m)
	magid, sta	stamag2x (stmmagidx)	2m (1m)	100k (1m)
	orid	smorid2x (stmoridx)	1m (1m)	100k (1m)
wftag	*tagid*	wftidx	(1m)	(100k)
	wfid	wftwfidx	1m (2m)	1m (200k)

Table 73 lists the synonyms of the SEL2 account.

TABLE 73: SEL2 ACCOUNT SYNONYMS

Synonym Name	Account	Table	Description
amp3c	IDCX	**amp3c**	convenience (station processing)
ampdescript	IDCX	**ampdescript**	SEL2 data, network processing
amplitude	IDCX	**amplitude**	SEL2 data, network processing
apma	IDCX	**apma**	convenience (station processing)
arrival	IDCX	**arrival**	SEL2 data, network processing
assoc_stapro[1]	IDCX	**assoc**	network processing
detection	IDCX	**detection**	convenience (station processing)
hydro_features[2]	IDCX	**hydro_features**	convenience (station processing)
infra_features[2]	IDCX	**infra_features**	convenience (station processing)
interval	IDCX	**interval**	SEL2 data, network processing
lastid[1]	IDCX	**lastid**	schema administration
na_value[2]	IDCX	**na_value**	schema administration
origerr_stapro[1]	IDCX	**origerr**	network processing
origin_stapro[1]	IDCX	**origin**	network processing
request[1]	IDCX	**request**	*Retrieve Subsystem* (*DACS*)
stassoc	IDCX	**stassoc**	network processing
wfdisc	IDCX	**wfdisc**	network processing
ga_tag[1]	SEL1	**ga_tag**	network processing
affiliation[1]	STATIC	**affiliation**	SEL2 data, network processing
beamaux[1]	STATIC	**beamaux**	SEL2 data
gregion[1]	STATIC	**gregion**	SEL2 data
instrument[1]	STATIC	**instrument**	SEL2 data, network processing
network[1]	STATIC	**network**	system monitoring
participation[1]	STATIC	**participation**	system monitoring

TABLE 73: SEL2 ACCOUNT SYNONYMS (CONTINUED)

Synonym Name	Account	Table	Description
sensor[1]	STATIC	**sensor**	SEL2 data, network processing
site[1]	STATIC	**site**	SEL2 data, network processing
siteaux[1]	STATIC	**siteaux**	SEL2 data, network processing
sitechan[1]	STATIC	**sitechan**	SEL2 data, network processing
sregion[1]	STATIC	**sregion**	SEL2 data

1. did not exist in the archival SEL2 account at the PIDC on 15 March 1999
2. did not exist in either SEL2 account at the PIDC on 15 March 1999

The SEL2 account does not require views, triggers, or sequences (Tables 74 – 76).

TABLE 74: SEL2 ACCOUNT VIEWS

View Name
none

TABLE 75: SEL2 ACCOUNT TRIGGERS

Trigger Name
none

TABLE 76: SEL2 ACCOUNT SEQUENCES

Sequence Name
none

SEL3 ACCOUNT

The SEL3 account is the repository of the data forming the SEL3. Events are automatically built (if they have origin times approximately 12 hours prior to real time) from detections made on the waveforms of the S/H/I networks. Applications that connect to the SEL3 account derive the connect string by referring to the symbolic name SEL3DB. Table 77 describes the SEL3 account by function.

TABLE 77: SEL3 ACCOUNT BY FUNCTION

Function	Tables And Views	Description
SEL3 data	**assoc** **netmag** **origerr** **origin** **parrival** **remark** **stamag**	applications: *Message Subsystem*, *Subscription Subsystem*, interactive analysis synonyms: **affiliation, ampdescript, amplitude, arrival, beamaux, gregion, instrument, interval, sensor, site, siteaux, sitechan, sregion**
network processing	**assoc_temp_ga** **event** **origerr_temp_ga** **origin_temp_ga** **wftag**	applications: *GA*, *DFX* other tables: SEL3 data tables synonyms: **affiliation, assoc_stapro, ampdescript, amplitude, arrival, ga_tag, instrument, interval, origerr_stapro, origin_stapro, sensor, site, siteaux, sitechan, stassoc, wfdisc**

The external privileges granted for the SEL3 tables are shown in Table 78.

TABLE 78: SEL3 ACCOUNT TABLE PRIVILEGES

	Operational (Archival) Privileges		
Table Name	**Insert**	**Update**	**Delete**
assoc			MIGRATE
assoc_temp_ga[1]			
event			MIGRATE

TABLE 78: SEL3 ACCOUNT TABLE PRIVILEGES

	Operational (Archival) Privileges		
Table Name	**Insert**	**Update**	**Delete**
netmag			MIGRATE
origerr			MIGRATE
origerr_temp_ga[1]			
origin			MIGRATE
origin_temp_ga[1]			
parrival			
remark			
stamag	(MIGRATE)	(MIGRATE)	MIGRATE (MIGRATE)
wftag			MIGRATE

1. *GA* tables exist only on the operational SEL2 account

Table 79 provides table growth information for the SEL3 account.

TABLE 79: SEL3 ACCOUNT TABLE GROWTH

			3/15/99 Operational (Archival)		
Table Name	**New Rows per Month in 1,000s**	**Rows per Block**	**Initial Extent**	**Next Extent**	**Percent Increase**
assoc	33	35	16m (125m)	1m (7m)	0 (0)
assoc_temp_ga			100k	100k	0
event	4	83	4m (8m)	100k (1m)	0 (0)
netmag	6	50	8m (25m)	100k (2m)	0 (0)

TABLE 79: SEL3 ACCOUNT TABLE GROWTH (CONTINUED)

Table Name	New Rows per Month in 1,000s	Rows per Block	3/15/99 Operational (Archival)		
			Initial Extent	Next Extent	Percent Increase
origerr	4	30	5m (18m)	100k (1m)	0 (0)
origerr_temp_ga			100k	100k	0
origin	4	26	6m (24m)	100k (2m)	0 (0)
origin_temp_ga			100k	100k	0
parrival			200k (100k)	200k (100k)	0 (0)
remark			100k (100k)	100k (100k)	0 (0)
stamag	18	37	8m (92m)	292k (5m)	0 (0)
wftag			2m (7m)	500k (100k)	0 (0)

Table 80 lists the indexes of the SEL3 account.

TABLE 80: SEL3 ACCOUNT INDEXES

Table Name	Indexed Columns	3/15/99 Index Name (unique?)	3/15/99 Operational (Archival) Extents	
			Initial	Next
assoc	*orid, arid*	assocx (u)	4m (38m)	1m (2m)
	arid	assaridx	5m (32m)	1m (2m)

TABLE 80: SEL3 ACCOUNT INDEXES (CONTINUED)

Table Name	Indexed Columns	3/15/99 Index Name (unique?)	3/15/99 Operational (Archival) Extents	
			Initial	Next
assoc_temp_ga	*arid, orid*			
	orid			
event	*evid*	eventx (u)	3m (3m)	100k (500k)
netmag	*magid*	nmmagidx (u)	2m (7m)	100k (500k)
	orid	nmoridx	2m (6m)	100k (500k)
origerr	*orid*	orerrx (u)	800k (3m)	100k (500k)
origerr_temp_ga	*orid*			
origin	*orid*	oridx (u)	800k (3m)	100k (500k)
	time	otimex	1m (5m)	100k (500k)
origin_temp_ga	*orid*			
	time			
parrival	*parid*			
	orid			
remark	*commid, lineno*			

TABLE 80: SEL3 ACCOUNT INDEXES (CONTINUED)

Table Name	Indexed Columns	3/15/99 Index Name (unique?)	3/15/99 Operational (Archival) Extents	
			Initial	Next
stamag	*arid*	smarid2x (stmaridx)	2m (1m)	100k (1m)
	magid,sta	stamag2x (stmmagidx)	2m (1m)	100k (1m)
	orid	smorid2x (stmoridx)	2m (1m)	100k (1m)
wftag	*tagid*			
	wfid	wftwfidx (u)	3m (6m)	100k (100k)

Table 81 lists the synonyms of the SEL3 account.

TABLE 81: SEL3 ACCOUNT SYNONYMS

Synonym Name	Account	Table	Description
amp3c	IDCX	**amp3c**	convenience (station processing)
ampdescript	IDCX	**ampdescript**	SEL3 data, network processing
amplitude	IDCX	**amplitude**	SEL3 data, network processing
apma	IDCX	**apma**	convenience (station processing)
arrival	IDCX	**arrival**	SEL3 data, network processing
assoc_stapro[1]	IDCX	**assoc**	network processing
detection	IDCX	**detection**	convenience (station processing)
hydro_features[1]	IDCX	**hydro_features**	convenience (station processing)
infra_features[2]	IDCX	**infra_features**	convenience (station processing)
interval	IDCX	**interval**	SEL3 data, network processing

TABLE 81: SEL3 ACCOUNT SYNONYMS (CONTINUED)

Synonym Name	Account	Table	Description
lastid[1]	IDCX	**lastid**	schema administration
na_value[2]	IDCX	**na_value**	schema administration
origerr_stapro[1]	IDCX	**origerr**	network processing
origin_stapro[1]	IDCX	**origin**	network processing
stassoc	IDCX	**stassoc**	network processing
wfdisc	IDCX	**wfdisc**	network processing
ga_tag[1]	SEL1	**ga_tag**	network processing
affiliation[1]	STATIC	**affiliation**	SEL3 data, network processing
beamaux[1]	STATIC	**beamaux**	SEL3 data
gregion[1]	STATIC	**gregion**	SEL3 data
instrument[1]	STATIC	**instrument**	SEL3 data, network processing
network[1]	STATIC	**network**	system monitoring
participation[1]	STATIC	**participation**	system monitoring
sensor[1]	STATIC	**sensor**	SEL3 data, network processing
site[1]	STATIC	**site**	SEL3 data, network processing
siteaux[1]	STATIC	**siteaux**	SEL3 data, network processing
sitechan[1]	STATIC	**sitechan**	SEL3 data, network processing
sregion[1]	STATIC	**sregion**	SEL3 data

1. did not exist in the archival SEL3 account at the PIDC on 15 March 1999
2. did not exist in either SEL3 account at the PIDC on 15 March 1999

The SEL3 account does not require views, triggers, or sequences (Tables 82 – 84).

TABLE 82: SEL3 ACCOUNT VIEWS

View Name
none

TABLE 83: SEL3 ACCOUNT TRIGGERS

Trigger Name
none

TABLE 84: SEL3 ACCOUNT SEQUENCES

Sequence Name
none

STATIC ACCOUNT

The STATIC account contains tables holding static data that predominantly pertain to the IMS stations. Most of these tables are made available to other accounts by the use of synonyms. Operations personnel update these tables directly, not by any automated processes. These updates should be made under a source control mechanism, which provides a historical record of changes. Applications that connect to the STATIC account derive the connect string by referring to the symbolic name STATICDB. Table 85 divides the STATIC account by function.

TABLE 85: STATIC ACCOUNT BY FUNCTION

Function	Tables and Views	Description
station database	**affiliation** **instrument** **sensor** **site** **siteaux** **sitechan**	The station database set forms the most basic group of tables that are typically used by application programs when querying for static station data.
system monitoring	**network** **participation** **sitepoll** **site_address**	These tables are used by the system monitoring utilities when assessing the status of the system.
event QC	**dseisgrid** **dseisindex** **seisgrid** **seisindex**	applications: *AEQ*
bulletin data	**beamaux** **forbeamaux** **gregion** **sregion**	applications: *Message Subsystem*, *Subscription Subsystem*
convenience	**remark**	convenience
continuous data import	**stanet**	applications: *DLMan* (through a database trigger)

No external privileges are granted for the STATIC tables (Table 86).

TABLE 86: STATIC ACCOUNT TABLE PRIVILEGES

Table Name
none

Table 87 provides the table growth information for the STATIC account.

TABLE 87: STATIC ACCOUNT TABLE GROWTH

Table Name	New Rows per Month in 1,000s	Rows per Block	3/15/99 Operational (Archival)		
			Initial Extent	Next Extent	Percent Increase
affiliation			500k (250k)	100k (250k)	0 (0)
dseisgrid			200k (500k)	100k (100k)	0 (0)
dseisindex			100k (10k)	100k (10k)	0 (50)
forbeamaux			100k	100k	0
gregion			100k (200k)	100k (100k)	0 (0)
instrument			200k (400k)	100k (100k)	0 (0)
network			200k (250k)	100k (250k)	0 (0)
participation			100k (100k)	100k (100k)	0 (0)
remark			500k (500k)	100k (250k)	0 (0)
seisgrid			500k (500k)	100k (100k)	0 (0)
seisindex			100k (10k)	100k (10k)	0 (50)
sensor			200k (500k)	100k (100k)	0 (0)
site			500k (500k)	100k (250k)	0 (0)

TABLE 87: STATIC ACCOUNT TABLE GROWTH (CONTINUED)

Table Name	New Rows per Month in 1,000s	Rows per Block	3/15/99 Operational (Archival)		
			Initial Extent	Next Extent	Percent Increase
siteaux			100k (250k)	100k (250k)	0 (0)
sitechan			500k (500k)	100k (250k)	0 (0)
sitepoll			100k	100k	0
site_address			100k (100k)	100k (100k)	0 (0)
sregion			100k (100k)	100k (100k)	0 (0)
stanet			100k	100k	0

Table 88 shows the required indexes for the STATIC account.

TABLE 88: STATIC ACCOUNT INDEXES

Table Name	Indexed Columns	3/15/99 Index Name (unique?)	3/15/99 Operational (Archival) Extents	
			Initial	Next
affiliation	*net, sta*	affnetx (u) (affndx (u))	200k (300k)	100k (100k)
	sta, net	affstax (u)	200k	100k
gregion	*grn*	gregionx (u) (gregx (u))	100k (100k)	100k (100k)
	grname	greggrnamex (gregnamex)	100k (100k)	100k (100k)
instrument	*inid*	instrumentx (u) (inidx (u))	100k (100k)	100k (100k)

TABLE 88: STATIC ACCOUNT INDEXES (CONTINUED)

Table Name	Indexed Columns	3/15/99 Index Name (unique?)	3/15/99 Operational (Archival) Extents	
			Initial	Next
remark	*commid, lineno*	remarkx (u)	100k (100k)	100k (100k)
seisgrid	*icell*	seisgridx (u) (seisicellidx (u))	200k (200k)	100k (100k)
sensor	*sta, chan*	sensstax (sensx)	100k (300k)	100k (100k)
site	*sta*	sitestax (sitendx)	100k (100k)	100k (100k)
sitechan	*chanid*	sitechanx (u) (chanidx (u))	100k (100k)	100k (100k)
	sta, chan	stcstax (schndx)	100k (100k)	100k (100k)
stanet	*net, sta*	stanetx (u)	100k	100k
	sta	stanetstax (u)	100k	100k

Table 89 lists the synonyms of the STATIC account.

TABLE 89: STATIC ACCOUNT SYNONYMS

Synonym Name	Account	Table	Description
lastid[1]	IDCX	**lastid**	schema administration
na_value	IDCX	**na_value**	schema administration

1. did not exist for the archival STATIC account at the PIDC on 15 March 1999

Table 90 describes the sole view of the STATIC account.

TABLE 90: STATIC ACCOUNT VIEWS

View Name	Tables	Description
beamaux	**instrument, sensor, forbeamaux**	contains channels used to compute normalization factors for beams

The STATIC account has no triggers or sequences (Tables 91 – 92).

TABLE 91: STATIC ACCOUNT TRIGGERS

Trigger Name
none

TABLE 92: STATIC ACCOUNT SEQUENCES

Sequence Name
none

VIEW ACCOUNTS

The VIEW accounts provide a mechanism for analyst training and for examining the intermediate results of S/H/I processing without disturbing the existing information. A VIEW account exists for each of the S/H/I bulletin accounts: LEBVIEW, REBVIEW, SEL1VIEW, SEL2VIEW, and SEL3VIEW. None of the VIEW accounts have been populated at the PIDC, so the information in this section pertains to the design of the accounts. Table 93 lists the functions of the tables in the VIEW accounts.

TABLE 93: VIEW ACCOUNTS BY FUNCTION

Function	Tables and Views	Description
bulletin data	**amp3c** **amplitude** **apma** **arrival** **assoc** **detection** **discard** **event** **fkdisc** **hydro_features** **infra_features** **netmag** **origerr** **origin** **parrival** **remark** **stamag**	applications: interactive analysis (*ARS*, *XfkDisplay, SpectraPlot, PolariPlot, EvLoc, DFX*), scripts synonyms: **affiliation, ampdescript, beamaux, gregion, instrument, sensor, site, siteaux, sitechan, sregion, wftag, wfdisc**
interactive analysis	**event_control** **in_event_control**	applications: interactive analysis (*ARS*, *EvLoc*) other tables: bulletin data tables synonyms: **affiliation, ampdescript, gregion**, **instrument**, **in**_*tables*, **out**_*tables*, **sensor, site, siteaux, sitechan, sregion**

The VIEW accounts tables have no external privileges granted (Table 94).

TABLE 94: VIEW ACCOUNTS TABLE PRIVILEGES

Table Name
none

Table 95 lists the tables of the VIEW accounts. Table growth information is not known at this time.

TABLE 95: VIEW ACCOUNTS TABLE GROWTH

Table Name	New Rows per Month in 1,000s	Rows per Block	3/15/99 Operational (Archival)		
			Initial Extent	Next Extent	Percent Increase
amp3c					
amplitude					
apma					
arrival					
assoc					
detection					
discard					
event					
event_control					
fkdisc					
hydro_features					
infra_features					
in_event_control[1]					
netmag					
origerr					
origin					
parrival					
remark					
stamag					

1. not a table in the LEBVIEW or REBVIEW accounts

Table 96 lists the required indexes for the VIEW accounts. Extents are not known at this time.

TABLE 96: VIEW ACCOUNTS INDEXES

Table Name	Indexed Columns	3/15/99 Index Name (unique?)	3/15/99 Operational (Archival) Extents	
			Initial	Next
amp3c	*arid*			
amplitude	*ampid*			
	arid			
	parid			
apma	*arid*			
arrival	*arid*			
	stassid			
	time			
assoc	*arid*			
	orid, arid			
detection	*arid*			
	lddate			
	time			
discard	*evid*			
event	*evid*			
event_control	*orid*			
hydro_features	*arid*			
infra_features	*arid*			
in_event_control[1]	*orid*			
netmag	*magid*			
	orid			

TABLE 96: VIEW ACCOUNTS INDEXES (CONTINUED)

Table Name	Indexed Columns	3/15/99 Index Name (unique?)	3/15/99 Operational (Archival) Extents	
			Initial	Next
origerr	*orid*			
origin	*orid*			
	time			
parrival	*orid*			
	parid			
remark	*commid, lineno*			
stamag	*ampid*			
	arid			
	magid, sta			
	orid			

1. not a table in the LEBVIEW or REBVIEW accounts

Table 97 lists the synonyms of the VIEW accounts. If the value in the Account column is listed as "host", the host of the VIEW account should be substituted. For example, for the REBVIEW account, the "host" account is REB. Where the Account is listed as "view", the "VIEW" account should be substituted. For example, for the REBVIEW account, the "view" account is REBVIEW.

TABLE 97: VIEW ACCOUNTS SYNONYMS

Synonym Name	Account	Table	Description
ampdescript[1]	IDCX	**ampdescript**	bulletin data, interactive analysis
lastid[1]	IDCX	**lastid**	schema administration
na_value[1]	IDCX	**na_value**	schema administration
wfdisc[1]	IDCX	**wfdisc**	bulletin data

TABLE 97: VIEW ACCOUNTS SYNONYMS (CONTINUED)

Synonym Name	Account	Table	Description
allow_resid[1]	LEB	**allow_resid**	QC
in_amplitude[1]	host	**amplitude**	interactive analysis
in_arrival[1]	host	**arrival**	interactive analysis
in_assoc[1]	host	**assoc**	interactive analysis
in_event_control[1, 2]	host	**event_control**	interactive analysis
in_hydro_features[1]	host	**hydro_features**	interactive analysis
in_infra_features[1]	host	**infra_features**	interactive analysis
in_netmag[1]	host	**netmag**	interactive analysis
in_origerr[1]	host	**origerr**	interactive analysis
in_origin[1]	host	**origin**	interactive analysis
in_parrival[1]	host	**parrival**	interactive analysis
in_stamag[1]	host	**stamag**	interactive analysis
out_amplitude[1]	view	**amplitude**	interactive analysis
out_arrival[1]	view	**arrival**	interactive analysis
out_assoc[1]	view	**assoc**	interactive analysis
out_event_control[1]	view	**event_control**	interactive analysis
out_hydro_features[1]	view	**hydro_features**	interactive analysis
out_infra_features[1]	view	**infra_features**	interactive analysis
out_netmag[1]	view	**netmag**	interactive analysis
out_origerr[1]	view	**origerr**	interactive analysis
out_origin[1]	view	**origin**	interactive analysis
out_parrival[1]	view	**parrival**	interactive analysis
out_stamag[1]	view	**stamag**	interactive analysis
affiliation[1]	STATIC	**affiliation**	bulletin data, interactive analysis
beamaux[1]	STATIC	**beamaux**	bulletin data

TABLE 97: VIEW ACCOUNTS SYNONYMS (CONTINUED)

Synonym Name	Account	Table	Description
dseisgrid[1]	STATIC	**dseisgrid**	QC
dseisindex[1]	STATIC	**dseisindex**	QC
gregion[1]	STATIC	**gregion**	bulletin data, interactive analysis
instrument[1]	STATIC	**instrument**	bulletin data, interactive analysis
network[1]	STATIC	**network**	system monitoring
participation[1]	STATIC	**participation**	system monitoring
seisgrid[1]	STATIC	**seisgrid**	QC
seisindex[1]	STATIC	**seisindex**	QC
sensor[1]	STATIC	**sensor**	bulletin data, interactive analysis
site[1]	STATIC	**site**	bulletin data, interactive analysis
siteaux[1]	STATIC	**siteaux**	
sitechan[1]	STATIC	**sitechan**	
sregion[1]	STATIC	**sregion**	

1. did not exist in the VIEW accounts of either database at the PIDC on 15 March 1999
2. in_event_control is a synonym only for the LEBVIEW and REBVIEW accounts

The VIEW accounts contain no views, triggers, or sequences (Tables 98 – 100).

TABLE 98: VIEW ACCOUNTS VIEWS

View Name
none

TABLE 99: VIEW ACCOUNTS TRIGGERS

Trigger Name
none

TABLE 100: VIEW ACCOUNTS SEQUENCES

Sequence Name
none

RMSAUTO ACCOUNT

The RMSAUTO account contains the tables used by the radionuclide automatic processing modules. These tables consist of the Pulse Height Data (PHD) related data, the state-of-health related data, as well as the tables that hold the automatic processing analysis results.

The RMSAUTO account has no external privileges (Table 101).

TABLE 101: RMSAUTO ACCOUNT TABLE PRIVILEGES

Table Name
none

Table 102 provides information about the table extents of the RMSAUTO account. Table growth information is not known at this time.

TABLE 102: RMSAUTO ACCOUNT TABLE EXTENTS

	Extents		
Table Name	Initial	Next	Percent Increase
gards_sample_data	4608k	100k	50
gards_sample_status	1024k	100k	50
gards_sample_aux	1228k	100k	50
gards_sample_description	1740k	100k	50
gards_environment	100k	100k	50
gards_sample_cert	100k	100k	50
gards_sample_cert_lines	2355k	100k	50
gards_efficiency_cal	2764k	100k	50
gards_efficiency_pairs	11571k	100k	50
gards_energy_cal	1945k	100k	50
gards_energy_cal_orig	614k	100k	50
gards_energy_pairs	6963k	100k	50
gards_resolution_cal	1228k	100k	50
gards_resolution_pairs	7086k	100k	50
gards_total_effic	204k	100k	50
gards_nucl_ided	161771k	9117k	50
gards_nucl_ided_orig	113507k	6803k	50
gards_nucl_lines_ided	180490k	1055k	50
gards_nucl_lines_ided_orig	122327k	7147k	50
gards_peaks	86056k	5324k	50
gards_peaks_orig	59043k	3973k	50
gards_qchistory	1126k	100k	50
gards_comments	1843k	100k	50
gards_user_comments	1400k	100k	50

TABLE 102: RMSAUTO ACCOUNT TABLE EXTENTS (CONTINUED)

	Extents		
Table Name	Initial	Next	Percent Increase
gards_notify	100k	100k	50
gards_poc	100k	100k	50
gards_subscriptions	100k	100k	50
gards_export_queue	1638k	100k	50
gards_subscriptions_log	2764k	100k	50
gards_xchk	100k	100k	50
gards_fpe	100k	100k	50
gards_nic	2150k	100k	50
gards_data_log	2662k	100k	50
gards_interval	1843k	100k	50
gards_alerts	614k	100k	50
gards_dose_data	12697k	1638k	50
gards_flow_data	30822k	2555k	50
gards_met_data	21770k	2097k	50
gards_trendvue	122k	102k	50
gards_resolution_cal_orig	126k	155k	50
gards_query_results	81k	36k	50
gards_sample_flags	278k	233k	50
gards_sample_proc_params	524k	352k	50
gards_energy_pairs_orig	1441k	794k	50
gards_resolution_pairs_orig	1425k	794k	50

Table 103 lists the indexes required in the RMSAUTO account.

TABLE 103: RMSAUTO ACCOUNT INDEXES

Table Name	Indexed Columns	3/15/99 Index Name (unique?)	3/15/99 Operational Extents	
			Initial	Next
gards_sample_data	*station_id, detector_id, collect_stop, data_type, sample_type, spectral_ qualifier*	sample_data_ndx	1m	1m
gards_sample_status	*sample_id, status*	sample_status_ndx	1m	1m
gards_environment	*sample_id*	environment_ndx	100k	100k
gards_sample_cert	*sample_id*	sample_cert_ndx	100k	100k
gards_sample_cert_lines	*sample_id*	sample_cert_lines_ndx	300k	100k
gards_efficiency_cal	*sample_id*	efficiency_cal_ndx	1030k	1m
gards_efficiency_pairs	*sample_id*	efficiency_pairs_ndx	4100k	2m
gards_energy_cal	*sample_id*	energy_cal_ndx	1030k	1m
gards_energy_cal_orig	*sample_id*	energy_cal_orig_ndx	1030k	1m
gards_energy_pairs_orig	*sample_id*	energy_pairs_orig_ndx	4100k	2m
gards_energy_pairs	*sample_id*	energy_pairs_ndx	4100k	2m
gards_resolution_cal	*sample_id*	resolution_cal_ndx	1030k	1m
gards_resolution_pairs	*sample_id*	resolution_pairs_ndx	4100k	2m
gards_resolution_pairs_ orig	*sample_id*	resolution_pairs_orig_ ndx	4100k	2m
gards_nucl_ided	*sample_id*	nucl_ided_ndx	20m	10m
gards_nucl_ided_orig	*sample_id*	nucl_ided_orig_ndx	20m	10m

TABLE 103: RMSAUTO ACCOUNT INDEXES (CONTINUED)

Table Name	Indexed Columns	3/15/99 Index Name (unique?)	3/15/99 Operational Extents	
			Initial	Next
gards_nucl_lines_ided	*sample_id, peak, name*	nucl_lines_ided_ndx	20m	10m
gards_nucl_lines_ided_orig	*sample_id, peak, name*	nucl_lines_ided_orig_ndx	20m	10m
gards_peaks	*sample_id*	peaks_ndx	6710k	1312k
gards_peaks_orig	*sample_id*	peaks_orig_ndx	3140k	1130k
gards_comments	*sample_id, analyst*	comments_ndx	1200k	100k
gards_user_comments	*comment_id*	user_comments_ndx	200k	100k
gards_nic	*sample_id*	nic_ndx	500k	100k
gards_data_log	*station_id, data_type*	data_log_ndx	1100k	100k
gards_dose_data	*station_id, start_time, end_time*	dose_data_ndx	10m	10m
gards_flow_data	*station_id, start_time, end_time*	flow_data_ndx	20m	10m
gards_met_data	*end_time, start_time, station_id*	met_data_ndx	10m	10m

Table 104 lists the synonyms of the RMSAUTO account.

TABLE 104: RMSAUTO ACCOUNT SYNONYMS

Synonym Name	Account	Table or Sequence
gards_stations	RMSMAN	gards_stations
gards_stations_schedule	RMSMAN	gards_stations_schedule
gards_detectors	RMSMAN	gards_detectors
gards_stadet	RMSMAN	gards_stadet
gards_nucl_lib	RMSMAN	gards_nucl_lib
gards_nucl_lines_lib	RMSMAN	gards_nucl_lines_lib
gards_xe_nucl_lib	RMSMAN	gards_xe_nucl_lib
gards_xe_nucl_lines_lib	RMSMAN	gards_xe_nucl_lines_lib
gards_proc_params_template	RMSMAN	gards_proc_params
gards_qctargets	RMSMAN	gards_qctargets
gards_qcparams	RMSMAN	gards_qcparams
gards_mdas2report	RMSMAN	gards_mdas2report
gards_nucl2quantify	RMSMAN	gards_nucl2quantify
gards_codes	RMSMAN	gards_codes
gards_userenv	RMSMAN	gards_userenv
gards_nic_init	RMSMAN	gards_nic_init
gards_comments_seq	RMSMAN	gards_comments_seq
gards_detector_id	RMSMAN	gards_detector_id
gards_fpid_seq	RMSMAN	gards_fpid_seq
gards_pocid_seq	RMSMAN	gards_pocid_seq
gards_qviewer_seq	RMSMAN	gards_qviewer_seq
gards_sample_id_seq	RMSMAN	gards_sample_id_seq
gards_station_id	RMSMAN	gards_station_id
gards_subid_seq	RMSMAN	gards_subid_seq

TABLE 104: RMSAUTO ACCOUNT SYNONYMS (CONTINUED)

Synonym Name	Account	Table or Sequence
gards_comments_defs	RMSMAN	gards_comments_defs
gards_flags	RMSMAN	gards_flags
gards_pocid_seq	RMSMAN	gards_pocid_seq
gards_subid_seq	RMSMAN	gards_subid_seq
gards_prodid_seq	RMSMAN	gards_prodid_seq
gards_refline_master	RMSMAN	gards_refline_master
gards_relevant_nuclides	RMSMAN	gards_relevant_nuclides
gards_update_params_template	RMSMAN	gards_update_params_template
gards_update_reflines	RMSMAN	gards_update_reflines
gsd	RMSAUTO	gards_sample_data
gss	RMSAUTO	gards_sample_status
interval	RMSAUTO	gards_interval
fileproduct	IDCX	fileproduct
fpdescription	IDCX	fpdescription
lastid	IDCX	lastid

Table 105 provides information about the one required view of the RMSAUTO account.

TABLE 105: RMSAUTO ACCOUNT VIEWS

View Name	Tables
gards_sample	gards_sample_data, gards_sample_status, gards_stations, gards_detectors

Table 106 describes the required triggers of the RMSAUTO account.

TABLE 106: RMSAUTO ACCOUNT TRIGGERS

Trigger Name	Table	Type	Event	Tables For Select	Tables For Update
sample_data_trigger_ai	**gards_sample_data**	after	insert, update	**gards_sample_data**	**gards_export_queue, gards_stadet**
sample_status_trigger_au	**gards_sample_status**	after	update	**gards_sample_data, gards_sample_status**	**gards_export_queue, gards_fpe**
sample_data_insert	**gards_sample_data**	after	insert	**gards_sample_data**	RMSMAN.**gards_sample_data**
sample_data_update	**gards_sample_data**	after	update	**gards_sample_data**	RMSMAN.**gards_sample_data**
sample_data_delete	**gards_sample_data**	after	delete	**gards_sample_data**	RMSMAN.**gards_sample_data**
sample_update_ params_insert	**gards_sample_ update_params**	after	insert	**gards_sample_ update_params**	RMSMAN. **gards_sample_update_params**
sample_update_ params_update	**gards_sample_ update_params**	after	update	**gards_sample_ update_params**	RMSMAN. **gards_sample_update_params**
sample_update_ params_delete	**gards_sample_ update_params**	after	delete	**gards_sample_ update_params**	RMSMAN. **gards_update_params**
energy_pairs_orig_insert	**gards_energy_pairs_ orig**	after	insert	**gards_energy_pairs_ orig**	RMSMAN. **gards_energy_pairs_orig**
energy_pairs_orig_update	**gards_energy_pairs_ orig**	after	update	**gards_energy_pairs_ orig**	RMSMAN. **gards_energy_pairs_orig**
energy_pairs_orig_delete	**gards_energy_pairs_ orig**	after	delete	**gards_energy_pairs_ orig**	RMSMAN. **gards_energy_pairs_orig**
res_pairs_orig_insert	**gards_resolution_ pairs_orig**	after	insert	**gards_resolution_ pairs_orig**	RMSMAN. **gards_resolution_pairs_orig**

TABLE 106: RMSAUTO ACCOUNT TRIGGERS (CONTINUED)

Trigger Name	Table	Type	Event	Tables For Select	Tables For Update
res_pairs_orig_update	**gards_resolution_ pairs_orig**	after	update	**gards_resolution_ pairs_orig**	RMSMAN. **gards_resolution_pairs_orig**
res_pairs_orig_delete	**gards_resolution_ pairs_orig**	after	delete	**gards_resolution_ pairs_orig**	RMSMAN. **gards_resolution_pairs_orig**
sample_proc_ params_insert	**gards_sample_ proc_params**	after	insert	**gards_sample_ proc_params**	RMSMAN. **gards_sample_proc_params**
sample_proc_ params_update	**gards_sample_ proc_params**	after	update	**gards_sample_ proc_params**	RMSMAN. **gards_sample_proc_params**
sample_proc_ params_delete	**gards_sample_ proc_params**	after	delete	**gards_sample_ proc_params**	RMSMAN. **gards_sample_proc_params**
sample_status_insert	**gards_sample_status**	after	insert	**gards_sample_status**	RMSMAN.**gards_sample_status**
sample_status_update	**gards_sample_status**	after	update	**gards_sample_status**	RMSMAN.**gards_sample_status**
sample_status_delete	**gards_sample_status**	after	delete	**gards_sample_status**	RMSMAN.**gards_sample_status**
sample_aux_insert	**gards_sample_aux**	after	insert	**gards_sample_aux**	RMSMAN.**gards_sample_aux**
sample_aux_update	**gards_sample_aux**	after	update	**gards_sample_aux**	RMSMAN.**gards_sample_aux**
sample_aux_delete	**gards_sample_aux**	after	delete	**gards_sample_aux**	RMSMAN.**gards_sample_aux**
environment_insert	**gards_environment**	after	insert	**gards_environment**	RMSMAN.**gards_environment**
environment_update	**gards_environment**	after	update	**gards_environment**	RMSMAN.**gards_environment**
environment_delete	**gards_environment**	after	delete	**gards_environment**	RMSMAN.**gards_environment**
sample_cert_insert	**gards_sample_cert**	after	insert	**gards_sample_cert**	RMSMAN.**gards_sample_cert**
sample_cert_update	**gards_sample_cert**	after	update	**gards_sample_cert**	RMSMAN.**gards_sample_cert**

TABLE 106: RMSAUTO ACCOUNT TRIGGERS (CONTINUED)

Trigger Name	Table	Type	Event	Tables For Select	Tables For Update
sample_cert_delete	**gards_sample_cert**	after	delete	**gards_sample_cert**	RMSMAN.**gards_sample_cert**
sample_cert_lines_insert	**gards_sample_cert_ lines**	after	insert	**gards_sample_cert_ lines**	RMSMAN. **gards_sample_cert_lines**
sample_cert_lines_ update	**gards_sample_cert_ lines**	after	update	**gards_sample_cert_ lines**	RMSMAN. **gards_sample_cert_lines**
sample_cert_lines_delete	**gards_sample_cert_ lines**	after	delete	**gards_sample_cert_ lines**	RMSMAN. **gards_sample_cert_lines**
energy_cal_insert	**gards_energy_cal**	after	insert	**gards_energy_cal**	RMSMAN.**gards_energy_cal**
energy_cal_update	**gards_energy_cal**	after	update	**gards_energy_cal**	RMSMAN.**gards_energy_cal**
energy_cal_delete	**gards_energy_cal**	after	delete	**gards_energy_cal**	RMSMAN.**gards_energy_cal**
energy_cal_orig_insert	**gards_energy_cal_orig**	after	insert	**gards_energy_cal_orig**	RMSMAN. **gards_energy_cal_orig**
energy_cal_orig_update	**gards_energy_cal_orig**	after	update	**gards_energy_cal_orig**	RMSMAN. **gards_energy_cal_orig**
energy_cal_orig_delete	**gards_energy_cal_orig**	after	delete	**gards_energy_cal_orig**	RMSMAN. **gards_energy_cal_orig**
energy_pairs_insert	**gards_energy_pairs**	after	insert	**gards_energy_pairs**	RMSMAN.**gards_energy_pairs**
energy_pairs_update	**gards_energy_pairs**	after	update	**gards_energy_pairs**	RMSMAN.**gards_energy_pairs**
energy_pairs_delete	**gards_energy_pairs**	after	delete	**gards_energy_pairs**	RMSMAN.**gards_energy_pairs**
resolution_cal_insert	**gards_resolution_cal**	after	insert	**gards_resolution_cal**	RMSMAN.**gards_resolution_cal**
resolution_cal_update	**gards_resolution_cal**	after	update	**gards_resolution_cal**	RMSMAN.**gards_resolution_cal**
resolution_cal_delete	**gards_resolution_cal**	after	delete	**gards_resolution_cal**	RMSMAN.**gards_resolution_cal**

TABLE 106: RMSAUTO ACCOUNT TRIGGERS (CONTINUED)

Trigger Name	Table	Type	Event	Tables For Select	Tables For Update
resolution_pairs_insert	**gards_resolution_pairs**	after	insert	**gards_resolution_pairs**	RMSMAN. **gards_resolution_pairs**
resolution_pairs_update	**gards_resolution_pairs**	after	update	**gards_resolution_pairs**	RMSMAN. **gards_resolution_pairs**
resolution_pairs_delete	**gards_resolution_pairs**	after	delete	**gards_resolution_pairs**	RMSMAN. **gards_resolution_pairs**
efficiency_cal_insert	**gards_efficiency_cal**	after	insert	**gards_efficiency_cal**	RMSMAN.**gards_efficiency_cal**
efficiency_cal_update	**gards_efficiency_cal**	after	update	**gards_efficiency_cal**	RMSMAN.**gards_efficiency_cal**
efficiency_cal_delete	**gards_efficiency_cal**	after	delete	**gards_efficiency_cal**	RMSMAN.**gards_efficiency_cal**
efficiency_pairs_insert	**gards_efficiency_pairs**	after	insert	**gards_efficiency_pairs**	RMSMAN.**gards_efficiency_pairs**
efficiency_pairs_update	**gards_efficiency_pairs**	after	update	**gards_efficiency_pairs**	RMSMAN.**gards_efficiency_pairs**
efficiency_pairs_delete	**gards_efficiency_pairs**	after	delete	**gards_efficiency_pairs**	RMSMAN.**gards_efficiency_pairs**
total_effic_insert	**gards_total_effic**	after	insert	**gards_total_effic**	RMSMAN.**gards_total_effic**
total_effic_update	**gards_total_effic**	after	update	**gards_total_effic**	RMSMAN.**gards_total_effic**
total_effic_delete	**gards_total_effic**	after	delete	**gards_total_effic**	RMSMAN.**gards_total_effic**
nucl_ided_insert	**gards_nucl_ided**	after	insert	**gards_nucl_ided**	RMSMAN.**gards_nucl_ided**
nucl_ided_update	**gards_nucl_ided**	after	update	**gards_nucl_ided**	RMSMAN.**gards_nucl_ided**
nucl_ided_delete	**gards_nucl_ided**	after	delete	**gards_nucl_ided**	RMSMAN.**gards_nucl_ided**
nucl_lines_ided_insert	**gards_nucl_lines_ided**	after	insert	**gards_nucl_lines_ided**	RMSMAN.**gards_nucl_lines_ided**
nucl_lines_ided_update	**gards_nucl_lines_ided**	after	update	**gards_nucl_lines_ided**	RMSMAN.**gards_nucl_lines_ided**

TABLE 106: RMSAUTO ACCOUNT TRIGGERS (CONTINUED)

Trigger Name	Table	Type	Event	Tables For Select	Tables For Update
nucl_lines_ided_delete	**gards_nucl_lines_ided**	after	delete	**gards_nucl_lines_ided**	RMSMAN.**gards_nucl_lines_ided**
nucl_ided_orig_insert	**gards_nucl_ided_orig**	after	insert	**gards_nucl_ided_orig**	RMSMAN.**gards_nucl_ided_orig**
nucl_ided_orig_update	**gards_nucl_ided_orig**	after	update	**gards_nucl_ided_orig**	RMSMAN.**gards_nucl_ided_orig**
nucl_ided_orig_delete	**gards_nucl_ided_orig**	after	delete	**gards_nucl_ided_orig**	RMSMAN.**gards_nucl_ided_orig**
nucl_lines_ided_ orig_insert	**gards_nucl_lines_ ided_orig**	after	insert	**gards_nucl_lines_ ided_orig**	RMSMAN. **gards_nucl_lines_ided_orig**
nucl_lines_ided_ orig_update	**gards_nucl_lines_ ided_orig**	after	update	**gards_nucl_lines_ ided_orig**	RMSMAN. **gards_nucl_lines_ided_orig**
nucl_lines_ided_ orig_delete	**gards_nucl_lines_ ided_orig**	after	delete	**gards_nucl_lines_ ided_orig**	RMSMAN. **gards_nucl_lines_ided_orig**
peaks_insert	**gards_peaks**	after	insert	**gards_peaks**	RMSMAN.**gards_peaks**
peaks_update	**gards_peaks**	after	update	**gards_peaks**	RMSMAN.**gards_peaks**
peaks_delete	**gards_peaks**	after	delete	**gards_peaks**	RMSMAN.**gards_peaks**
peaks_orig_insert	**gards_peaks_orig**	after	insert	**gards_peaks_orig**	RMSMAN.**gards_peaks_orig**
peaks_orig_update	**gards_peaks_orig**	after	update	**gards_peaks_orig**	RMSMAN.**gards_peaks_orig**
peaks_orig_delete	**gards_peaks_orig**	after	delete	**gards_peaks_orig**	RMSMAN.**gards_peaks_orig**
qchistory_insert	**gards_qchistory**	after	insert	**gards_qchistory**	RMSMAN.**gards_qchistory**
qchistory_update	**gards_qchistory**	after	update	**gards_qchistory**	RMSMAN.**gards_qchistory**
qchistory_delete	**gards_qchistory**	after	delete	**gards_qchistory**	RMSMAN.**gards_qchistory**
comments_insert	**gards_comments**	after	insert	**gards_comments**	RMSMAN.**gards_comments**

TABLE 106: RMSAUTO ACCOUNT TRIGGERS (CONTINUED)

Trigger Name	Table	Type	Event	Tables For Select	Tables For Update
comments_update	**gards_comments**	after	update	**gards_comments**	RMSMAN.**gards_comments**
comments_delete	**gards_comments**	after	delete	**gards_comments**	RMSMAN.**gards_comments**
user_comments_insert	**gards_user_comments**	after	insert	**gards_user_comments**	RMSMAN.**gards_user_comments**
user_comments_update	**gards_user_comments**	after	update	**gards_user_comments**	RMSMAN.**gards_user_comments**
user_comments_delete	**gards_user_comments**	after	delete	**gards_user_comments**	RMSMAN.**gards_user_comments**
nic_insert	**gards_nic**	after	insert	**gards_nic**	RMSMAN.**gards_nic**
nic_update	**gards_nic**	after	update	**gards_nic**	RMSMAN.**gards_nic**
nic_delete	**gards_nic**	after	delete	**gards_nic**	RMSMAN.**gards_nic**
res_cal_orig_insert	**gards_resolution_ cal_orig**	after	insert	**gards_resolution_ cal_orig**	RMSMAN. **gards_resolution_cal_orig**
res_cal_orig_update	**gards_resolution_ cal_orig**	after	update	**gards_resolution_ cal_orig**	RMSMAN. **gards_resolution_cal_orig**
res_cal_orig_delete	**gards_resolution_ cal_orig**	after	delete	**gards_resolution_ cal_orig**	RMSMAN. **gards_resolution_cal_orig**
sample_flags_insert	**gards_sample_flags**	after	insert	**gards_sample_flags**	RMSMAN.**gards_sample_flags**
sample_flags_update	**gards_sample_flags**	after	update	**gards_sample_flags**	RMSMAN.**gards_sample_flags**
sample_flags_delete	**gards_sample_flags**	after	delete	**gards_sample_flags**	RMSMAN.**gards_sample_flags**

No sequences are required in the RMSAUTO account (Table 107).

TABLE 107: RMSAUTO ACCOUNT SEQUENCES

Sequence Name
none

RMSMAN ACCOUNT

The RMSMAN account contains the tables used by the radionuclide interactive processing modules. These tables consist of the tables that hold the interactive processing analysis results as well as the static tables used in the radionuclide processing.

The RMSMAN account has no external privileges granted (Table 108).

TABLE 108: RMSMAN ACCOUNT TABLE PRIVILEGES

Table Name
none

Table 109 describes the table extents of the RMSMAN account. Growth information is not available at this time.

TABLE 109: RMSMAN ACCOUNT TABLE EXTENTS

	Extents		
Table Name	**Initial**	**Next**	**Percent Increase**
gards_sample_data	4505k	100k	50
gards_sample_status	1204k	100k	50
gards_sample_aux	1228k	100k	50
gards_environment	100k	100k	50

TABLE 109: RMSMAN ACCOUNT TABLE EXTENTS (CONTINUED)

	Extents		
Table Name	Initial	Next	Percent Increase
gards_sample_cert	100k	100k	50
gards_sample_cert_lines	2355k	100k	50
gards_efficiency_cal	2764k	100k	50
gards_efficiency_pairs	11468k	100k	50
gards_energy_cal	1843k	100k	50
gards_energy_cal_orig	614k	100k	50
gards_energy_pairs	6963k	100k	50
gards_resolution_cal	1228k	100k	50
gards_resolution_pairs	7086k	100k	50
gards_total_effic	264k	100k	50
gards_nucl_ided	161771k	9117k	50
gards_nucl_ided_orig	115507k	6803k	50
gards_nucl_lines_ided	170905k	9576k	50
gards_nucl_lines_ided_orig	122327k	7147k	50
gards_peaks	86056k	5324k	50
gards_peaks_orig	59043k	3973k	50
gards_qchistory	1126k	100k	50
gards_comments	2048k	100k	50
gards_user_comments	2662k	100k	50
gards_notify	100k	100k	50
gards_poc	100k	100k	50
gards_subscriptions	100k	100k	50
gards_export_queue	1740k	100k	50
gards_subscriptions_log	3072k	100k	50

TABLE 109: RMSMAN ACCOUNT TABLE EXTENTS (CONTINUED)

	Extents		
Table Name	Initial	Next	Percent Increase
gards_xchk	100k	100k	50
gards_fpe	100k	100k	50
gards_nic	1200k	100k	50
gards_detectors	20k	20k	50
gards_stadet	100k	100k	50
gards_stations	28k	20k	50
gards_stations_schedule	100k	100k	50
gards_nucl_lib	100k	100k	50
gards_nucl_lines_lib	100k	100k	50
gards_xe_nucl_lib	100k	100k	50
gards_xe_nucl_lines_lib	100k	100k	50
gards_proc_params	100k	100k	50
gards_qcparams	100k	100k	50
gards_qctargets	100k	100k	50
gards_mdas2report	100k	100k	50
gards_nucl2quantify	100k	100k	50
gards_codes	100k	100k	50
gards_userenv	100k	100k	50
gards_comments_defs	100k	100k	50
gards_nic_init	100k	100k	50
gards_sample_flags	228k	233k	50
gards_flags	24k	102k	50
gards_resolution_pairs_orig	1425k	794k	50
gards_trendvue	114k	155k	50

TABLE 109: RMSMAN ACCOUNT TABLE EXTENTS (CONTINUED)

	Extents		
Table Name	Initial	Next	Percent Increase
gards_query_results	122k	573k	50
gards_refline_master	122k	122k	50
gards_relevant_nuclides	122k	102k	50
gards_proc_params_template	102k	102k	50
gards_sample_update_params	278k	233k	50
gards_update_params_template	122k	102k	50
gards_update_reflines	102k	102k	50
gards_energy_pairs_orig	1437k	794k	50
gards_sample_proc_params	524k	352k	50
gards_resolution_cal_orig	114k	155 k	50

Table 110 lists the indexes required in the RMSMAN account.

TABLE 110: RMSMAN ACCOUNT INDEXES

Table Name	Indexed Columns	3/15/99 Index Name (unique?)	3/15/99 Operational Extents	
			Initial	Next
gards_sample_data	*station_id, detector_id, collect_stop, data_type, sample_type, spectral_ qualifier*	sample_data_ndx	1m	1m
gards_sample_status	*sample_id, status*	sample_status_ndx	1m	1m
gards_environment	*sample_id*	environment_ndx	100k	100k
gards_sample_cert	*sample_id*	sample_cert_ndx	100k	100k
gards_sample_cert_lines	*sample_id*	sample_cert_lines_ndx	300k	100k
gards_efficiency_cal	*sample_id*	efficiency_cal_ndx	1030k	1m
gards_efficiency_pairs	*sample_id*	efficiency_pairs_ndx	4100k	2m
gards_energy_cal	*sample_id*	energy_cal_ndx	1030k	1m
gards_energy_cal_orig	*sample_id*	energy_cal_orig_ndx	1030k	1m
gards_energy_pairs	*sample_id*	energy_pairs_ndx	4100k	2m
gards_energy_pairs_orig	*sample_id*	energy_pairs_ndx_ orig	4100k	2m
gards_resolution_cal	*sample_id*	resolution_cal_ndx	1030k	1m
gards_resolution_pairs_ orig	*sample_id*	resolution_pairs_orig_ ndx	4100k	2m
gards_resolution_pairs	*sample_id*	resolution_pairs_ndx	4100k	2m
gards_nucl_ided	*sample_id*	nucl_ided_ndx	10m	10m
gards_nucl_ided_orig	*sample_id*	nucl_ided_orig_ndx	10m	10m

TABLE 110: RMSMAN ACCOUNT INDEXES (CONTINUED)

Table Name	Indexed Columns	3/15/99 Index Name (unique?)	3/15/99 Operational Extents	
			Initial	Next
gards_nucl_lines_ided	*sample_id, peak, name*	nucl_lines_ided_ndx	20m	10m
gards_nucl_lines_ided_orig	*sample_id, peak, name*	nucl_lines_ided_orig_ndx	20m	10m
gards_peaks	*sample_id*	peaks_ndx	6710k	1312k
gards_peaks_orig	*sample_id*	peaks_orig_ndx	3140k	1130k
gards_comments	*sample_id, analyst*	comments_ndx	1200k	100k
gards_user_comments	*comment_id*	user_comments_ndx	200k	100k
gards_nic	*sample_id*	nic_ndx	500k	100k

Table 111 lists the synonyms of the RMSMAN account.

TABLE 111: RMSMAN ACCOUNT SYNONYMS

Synonym Name	Account	Table
gards_data_log	RMSAUTO	**gards_data_log**
gards_interval	RMSAUTO	**gards_interval**
gards_alerts	RMSAUTO	**gards_alerts**
gards_met_data	RMSAUTO	**gards_met_data**
gards_flow_data	RMSAUTO	**gards_flow_data**
gards_dose_data	RMSAUTO	**gards_dose_data**
gni	RMSMAN	**gards_nucl_ided**
gnli	RMSMAN	**gards_nucl_lines_ided**
gsd	RMSMAN	**gards_sample_data**

TABLE 111: RMSMAN ACCOUNT SYNONYMS (CONTINUED)

Synonym Name	Account	Table
gss	RMSMAN	**gards_sample_status**
interval	RMSMAN	**gards_interval**
xchk	RMSMAN	**gards_xchk**
fileproduct	IDCX	**fileproduct**
fpdescription	IDCX	**fpdescription**
lastid	IDCX	**lastid**

Table 112 describes the **gards_sample** view, which is required in the RMSMAN account.

TABLE 112: RMSMAN ACCOUNT VIEWS

View Name	Tables
gards_sample	**gards_sample_data, gards_sample_status, gards_stations, gards_detectors**

Table 113 lists the required triggers of the RMSMAN account.

TABLE 113: RMSMAN ACCOUNT TRIGGERS

Trigger Name	Table	Type	Event	Tables For Select	Tables For Update
sample_data_ trigger_ai	**gards_ sample_data**	after	insert, update	**gards_ sample_data**	**gards_ export_queue, gards_stadet**
sample_status_ trigger_au	**gards_ sample_status**	after	update	**gards_ sample_data, gards_ sample_status**	**gards_ export_queue, gards_fpe**

Table 114 lists the required sequences of the RMSMAN account.

TABLE 114: RMSMAN ACCOUNT SEQUENCES

Sequence Name	Increment	Maxvalue	Minvalue	Cache
gards_sample_id_seq	1	default	default	nocache
gards_detector_id	1	default	default	nocache
gards_station_id	1	default	default	nocache
gards_comments_seq	1	default	default	nocache
gards_pocid_seq	1	default	default	nocache
gards_subid_seq	1	default	default	nocache
gards_prodid_seq	1	default	default	nocache
gards_fpid_seq	1	default	default	nocache
gards_qviewer_seq	1	default	default	nocache

CENTER ACCOUNT

The CENTER account exists to provide read access to the other accounts. The only tables of the schema for which the CENTER account has update privileges are the tables associated with reporting problems.

As shown in Tables 115 – 118, the CENTER account has no functional tables.

TABLE 115: CENTER ACCOUNT BY FUNCTION

Function
none

TABLE 116: CENTER ACCOUNT TABLE PRIVILEGES

Table Name
none

TABLE 117: CENTER ACCOUNT TABLE GROWTH

Table Name
none

TABLE 118: CENTER ACCOUNT INDEXES

Index Name
none

Table 119 lists the synonyms of the CENTER account.

TABLE 119: CENTER ACCOUNT SYNONYMS

Synonym Name	Account	Table	Description
lastid	IDCX	**problastid**	schema administration
problem	IDCX	**problem**	system monitoring
problemlog	IDCX	**problemlog**	system monitoring
problemmail	IDCX	**problemmail**	system monitoring

The CENTER account contains no indexes, synonyms, views, triggers, or sequences (Tables 120 – 123).

TABLE 120: CENTER ACCOUNT SYNONYMS

Synonym Name
none

TABLE 121: CENTER ACCOUNT VIEWS

View Name
none

TABLE 122: CENTER ACCOUNT TRIGGERS

Trigger Name
none

TABLE 123: CENTER ACCOUNT SEQUENCES

Sequence Name
none

References

[deB98] deBuzna, J., Kohl, B., and Skov, M., *Oracle RDBMS Compatibility Checklist for IDC Release 2*, Technical Report CMR-98/38 Rev. 2, 1998.

[IDC5.1.1Rev1] Science Applications International Corporation, Pacific-Sierra Research Corporation, *Database Schema (Part 1, Part 2, and Part 3)*, *Revision 1*, SAIC-99/3009, PSR-99/TN1142, 1999

[Koc97] Koch, G., and Loney, K., *Oracle8: The Complete Reference*, Oracle Press, Osborne/McGraw-Hill, Berkeley, 1997.

[Lon97] Loney, K, *Oracle DBA Handbook 7.3 Edition*, Osborne McGraw-Hill, 1997.

[Urm96] Urman, S., *Oracle PL/SQL Programming*, Osborne McGraw-Hill, 1996.

Glossary

C

CPU

Central Processing Unit.

CTBT

Comprehensive Nuclear Test-Ban Treaty (the Treaty).

D

DACS

Distributed Application Control System. This software supports inter-application message passing and process management.

G

GB

Gigabyte. A measure of computer memory or disk space that is equal to 1,024 megabytes.

H

HWCI

Hardware Configuration Item. Aggregation of hardware treated as a single entity in the configuration management process.

I

ID

Identification; identifier.

IDC

International Data Centre.

IMS

International Monitoring System.

K

k

Kilobyte. 1,024 bytes.

L

LAN

Local Area Network.

M

m

Megabyte. 1,024 kilobytes.

MB

Megabyte. 1,024 kilobytes.

MHz

Megahertz. A million cycles (occurrences, alterations, pulses) per second.

P

PIDC

Prototype International Data Centre.

PL/SQL

Procedural Language for SQL.

Q

QC

Quality Control.

R

RAM

Random Access Memory.

RDBMS

Relational Database Management System.

S

schema

Database structure description.

S/H/I

seismic, hydroacoustic, and infrasonic.

Solaris

Name of the operating system used on Sun Microsystems hardware.

SQL

Structured Query Language; a language for manipulating data in a relational database.

T

TCP/IP

Transmission Control Protocol/Internet Protocol.

U

UNIX

Trade name of the operating system used by the Sun workstations.

V

virtual memory

Storage allocated on a relatively slow medium (usually disk) that provides additional memory should an application require more random access memory than is physically available on the computer.

Index

A

accounts
- CENTRE 20
- IDCX 20, 27
- LEB 20, 44
- MAP 20, 54
- MIGRATE 20, 57
- REB 20
- RMSAUTO 20
- RMSLYST 20
- RMSMAN 20
- SEGMENT 20
- SEL1 20
- SEL2 20
- SEL3 20
- STATIC 20
- VIEW 20

archival database 2

B

base tables 23

D

data import 5

E

extents
- policy for indexes 17
- policy for tables 15

F

functional groups 22
- IDCX account 28
- LEB account 44
- MAP account 54
- MIGRATE account 57
- REB account 60
- SEGMENT account 68
- SEL1 account 72
- SEL2 account 79
- SEL3 account 86
- STATIC account 92
- VIEW accounts 97

I

IDs 14

indexes 16, 25
- IDCX account 37
- LEB account 49
- MIGRATE account 58
- REB account 64
- RMSAUTO account 107
- RMSMAN account 121
- SEGMENT account 70
- SEL1 account 75
- SEL2 account 82
- SEL3 account 88
- STATIC account 95

VIEW accounts 100
instance 2
interactive analysis 6

L

links 12

M

migration 9, 12, 13

N

network processing 6

O

operational database 2

P

privileges, policy 15
purging 13

S

sequences 14, 27
RMSMAN account 124
station processing 5
synonyms 25
CENTRE account 125
IDCX account 42
LEB account 52
MIGRATE account 58
REB account 67
RMSAUTO account 109
RMSMAN account 122
SEGMENT account 71
SEL1 account 77
SEL2 account 84
SEL3 account 90
STATIC account 96
VIEW accounts 101

T

table creation 14
table extents
RMSAUTO account 104
RMSMAN account 117
table growth 24
IDCX account 33
LEB account 47
MAP account 55
MIGRATE account 58
REB account 62
SEGMENT account 69
SEL1 account 74
SEL2 account 81
SEL3 account 87
STATIC account 94
VIEW accounts 99
table priviledges 23
IDCX account 30
LEB account 46
MIGRATE account 57
SEL2 account 80
tablespace 22
policy for indexes 16
policy for tables 15
testbed database 2
triggers 26
IDCX account 43
RMSAUTO account 111
RMSMAN account 123

V

views 26
IDCX account 43
RMSAUTO account 110
RMSMAN account 123
STATIC account 97